

PROJECT TEAM:

OWNER:
CARDINAL CAPITAL MANAGEMENT, INC.
901 SOUTH 70TH STREET
WEST ALLIS, WI 53214
CONTACT: TADHG MCINERNEY
PH: 414-395-4470
TMCINERNEY@CARDINALCAPITAL.US

ARCHITECT:
HGF ARCHITECTS
2602 N. ELIZABETH ST.
PUEBLO, COLORADO 81003
719-543-7600
CONTACT: AMY HURTIG SMITH/ RON PADEN
PH: 719-360-3164
EMAIL: ASMITH@HGFARCH.COM
RON@LAZARUSDESIGNSLLC.COM

RESIDENTIAL DESIGNER:
LAZARUS DESIGNS, LLC
4884 BUTTERFIELD DR.
COLORADO SPRINGS, CO
80923
CONTACT: RON PADEN
PHONE: 719-360-3164
EMAIL: RON@LAZARUSDESIGNSLLC.COM

CIVIL ENGINEER :
DK HORN ENGINEERING & DESIGN
1910 ASPEN CIRCLE
PUEBLO, CO 81006
CONTACT: DARLENE K. HORN
EMAIL: DARLENE@DKHENG.COM

STRUCTURAL ENGINEER:
HCDA ENGINEERING
9 S. WEBER ST.
COLORADO SPRINGS, CO 80903
CONTACT: STEVE HORNER
EMAIL:

MECHANICAL ENGINEER:
PLANT ENGINEERING CONSULTANTS
320 W. FILLMORE ST.
SUITE #200
COLORADO SPRINGS, CO 80907
CONTACT: ROGER LEMON
PH. 719-473-7077
EMAIL:RLEMMON@PLANTCI.COM

ELECTRICAL ENGINEER:
KOHNERT ELECTRICAL ENGINEERS
911 S. 8TH STREET, SUITE 200
COLORADO SPRINGS, COLORADO
80905
CONTACT:
PH: 719-633-2637
EMAIL:

HGF ARCHITECTS INC.

STATE OF COLORADO
AMY G. HURTIG-SMITH
400418
LICENSED ARCHITECT

PROJECT INFORMATION:

LEGAL DESCRIPTION:
NOTE: INFORMATION BELOW OBTAINED FROM PUEBLO COUNTY GIS MAP

A POR OF LOT 2, BONFORTE PARK SUBDIVISION, MORE PART DESC AS FOLLOWS: BEG AT THE NWLY COR OF SD LOT 2; TH S 55 DEG 53 MIN 06 SEC E (BEARINGS BASED ON THE NLY LN OF LOT 2, BONFORTE PARK SUBDIVISION, MONUMENTED AT EACH END WITH A NO 4 REBAR WITH A YELLOW PLASTIC CAP PLS NO 16128, TO BEAR S 55 DEG 53 MIN 06 SEC E, AS EST ON THE REC PLAT THEREOF) ALG NLY LN OF SD LOT 2, A DIST OF 290.27 FT TO THE NELY COR OF SD LOT 2; TH ALG THE ARC OF A NON-TANGENT CURVE TO THE RT WHOSE CENTER BEARS N 56 DEG 54 MIN 12 SEC W, HAVING A CENTRAL ANGLE OF 10 DEG 34 MIN 07 SEC + A RAD OF 666.78 FT, A DIST OF 122.99 FT TO THE NELY COR OF LOT 3, SD BONFORTE PARK SUBDIVISION; TH N 55 DEG 53 MIN 06 SEC W ALG THE NLY LN OF SD LOT 3 + SD NLY LN EXT A DIST OF 278.76 FT TO A PT ON THE WLY LN OF SD LOT 2; TH N 33 DEG 00 MIN 23 SEC E ALG SD WLY LN, A DIST OF 122.50 FT TO THE PT OF BEG. SD PAR CONT .81A MORE OR LESS FORMERLY #04-194-37-002

PARCEL NUMBER:
419437006

ADDRESS:
1619 BONFORTE BLVD.
PUEBLO, CO.
(NOTE: ADDRESS OBTAINED FROM PUEBLO COUNTY, GIS MAP)

BUILDING SITE



1 VICINITY MAP
1/2" = 1'-0"

SHEET SCHEDULE:

A0.0 COVER

CODE ANALYSIS
CA1.0 CODE ANALYSIS PLAN

CIVIL
C1.0 CIVIL COVER SHEET
C2.0 CIVIL SITE PLAN
C3.0 CIVIL SITE UTILITY PLAN
C4.0 CIVIL GRADING AND DRAINAGE PLAN

LANDSCAPING
L1.1 FINAL LANDSCAPE PLAN
L1.2 LANDSCAPE DETAILS

ARCHITECTURAL
A1.1 ARCHITECTURAL SITE PLAN

A2.1 FLOOR PLAN-1ST FLOOR
REFLECTED CEILING PLAN-1ST FLOOR
A2.2 FLOOR PLAN-2ND FLOOR
REFLECTED CEILING PLAN-2ND FLOOR
A2.3 FLOOR PLAN-3RD FLOOR
REFLECTED CEILING PLAN-3RD FLOOR
A2.4 WALL TYPES/ UNIT LAYOUT
A2.5 ROOF PLAN/ ROOF DETAILS
A2.6 ENLARGED PLANS
A2.7 ENLARGED PLANS
A2.8 ENLARGED PLANS
A2.9 UNIT FLOOR PLANS
A2.10 INTERIOR ELEVATIONS-UNIT TYPE AND B

A3.1 EXTERIOR ELEVATIONS

A4.1 BUILDING CROSS SECTIONS

A5.1 WALL SECTIONS
A5.2 WALL SECTIONS
A5.3 WALL SECTIONS

A6.1 INTERIOR ELEVATIONS
A6.2 ROOM FINISH SCHEDULE

A7.1 DOOR SCHEDULE/ TYPES/ DETAILS
A7.2 DOOR DETAILS

A7.3 WINDOW TYPES/ DETAILS
A7.4 WINDOW DETAILS

STRUCTURAL
S1.1 DETAILS AND GENERAL NOTES
S1.2 DETAILS

S2.1 FOUNDATION PLAN
S2.2 SECOND FLOOR FRAMING PLAN
S2.3 THIRD FLOOR FRAMING PLAN
S2.4 ROOF FRAMING PLAN

S3.1 STRUCTURAL DETAILS
S3.2 STRUCTURAL DETAILS

SHEET SCHEDULE:

MECHANICAL
M 001 MECHANICAL NOTES AND LEGEND
M 002 MECHANICAL SPECIFICATIONS

M111 MECHANICAL HVAC-FIRST FLOOR PLAN
M112 MECHANICAL HVAC-SECOND FLOOR PLAN
M113 MECHANICAL HVAC-THIRD FLOOR PLAN
M114 MECHANICAL ROOF PLAN
M131 MECHANICAL GAS PLAN

M500 MECHANICAL DETAILS

M610 MECHANICAL SCHEDULES

PLUMBING
P 001 PLUMBING NOTES AND LEGEND
P002 PLUMBING SPECIFICATIONS

P111 PLUMBING WATER -FIRST FLOOR PLAN
P112 PLUMBING WATER-SECOND FLOOR PLAN
P113 PLUMBING WATER-THIRD FLOOR PLAN

P121 PLUMBING SANITARY-FIRST FLOOR PLAN
P122 PLUMBING SANITARY-SECOND FLOOR PLAN
P123 PLUMBING SANITARY-THIRD FLOOR PLAN
P124 PLUMBING ROOF PLAN

P141 FIRE PROTECTION PLAN-FIRST FLOOR
P142 FIRE PROTECTION PLAN-2ND AND 3RD FLOOR

P500 PLUMBING DETAILS

P600 PLUMBING SANITARY ISOMETRIC PLAN
P610 PLUMBING SCHEDULES

ELECTRICAL
E0.1 ELECTRICAL SITE PLAN AND OVERALL PLANS
E0.2 LIGHTING FIXTURE SCHEDULE, SYMBOL LEGENDS AND LIGHTING CONTROL DIAGRAM
E0.3 AREA OF RESCUE DETAIL AND ENTRY SYSTEM DETAILS
E0.4 INFORMATION TECHNOLOGY SCHEDULES/ DETAILS AND TELEPHONE TERMINAL BOARD RISER DIAGRAM

E1.1 FIRST FLOOR LIGHTING AND POWER PLANS
E1.2 SECOND FLOOR LIGHTING AND POWER PLANS
E1.3 THIRD FLOOR LIGHTING AND POWER PLANS

E2.1 LOW VOLTAGE SYSTEMS PLANS

E3.1 1/4 SCALE UNIT ELECTRICAL PLANS AND FIXTURE SCHEDULE
E3.2 FIRST FLOOR 1/4" PLANS, IT ROOM, CENTRAL AREA AND EAST MECHANICAL ROOM
E3.3 SECOND AND THIRD FLOOR 1/4" SCALE PLANS, CENTRAL AREAS AND LAUNDRY ROOM

E4.1 SINGLE LINE DIAGRAMS AND SERVICE CALCS.
E4.2 FIRST FLOOR APARTMENT FEEDER LAYOUT, PANEL ARRANGEMENT AND PANEL SCHEDULES
E4.3 UNIT FEEDER INSTALLATION DETAILS

Lazarus Designs
719.360.3164
ron@lazarusdesignsllc.com
lazarusdesigns.blogspot.com

PROJECT NUMBER:	2019.90
PHASE:	PERMIT SET
PHASE ISSUE DATE:	4-27-20
DESIGNED BY:	RBP/AHS
SCALE:	As indicated

COVER

SHEET ISSUE DATE: 04/27/20

A0.0

THE RIGHT PLACE
CARDINAL CAPITAL MGMT.
A SUPPORTIVE HOUSING FACILITY



1 CODE ANALYSIS IST FLOOR PLAN

1/16" = 1'-0"

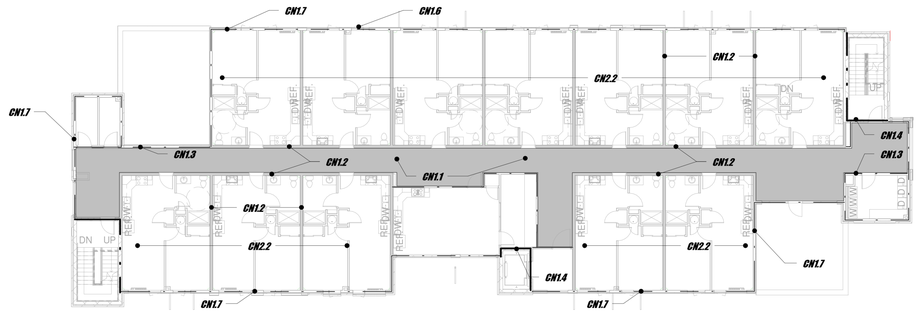

2 CODE ANALYSIS 2ND FLOOR PLAN

1/16" = 1'-0"

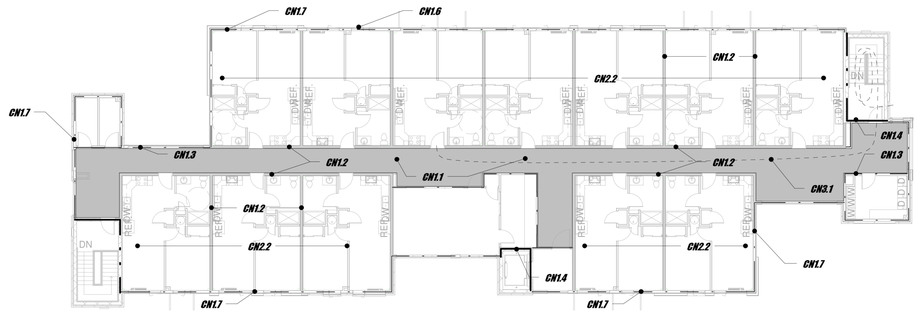

3 CODE ANALYSIS 3RD FLOOR PLAN

1/16" = 1'-0"

CODE ANALYSIS:

2015 IBC

SQUARE FOOTAGE BREAKDOWN:

First Floor	10,290 Sq. Ft.
Second Floor	9,113 Sq. Ft.
Third Floor	9,113 Sq. Ft.

Total Square Footage: 28,362 Square Feet

BUILDING OCCUPANCY:
Occupancy Group R-2 (IBC, 304.1)

TYPE OF CONSTRUCTION:
Type VB-Sprinklered (SM) (IBC 506.2)
Note: Group R occupancies are required to be sprinklered as per (420.5)

ALLOWABLE HEIGHT AND AREA
Maximum allowable height: 75 feet (504.3);5 stories (IBC, Table 504.4)
Proposed Height: 38 feet, 3 stories
Maximum Area: 21,000 sq. ft. per floor (IBC Table 506.2)
Proposed Building:

First Floor	10,290 Sq. Ft.
Second Floor	9,113 Sq. Ft.
Third Floor	9,113 Sq. Ft.
Total	28,516 Sq. Ft.

REQUIRED SEPERATION OF OCCUPANCIES
No separations required

SPECIAL DETAILED REQUIREMENTS BASED ON OCCUPANCY
Walls separating dwelling units shall be Fire partitions (420.2)
Floor construction shall be constructed as horizontal assemblies (420.3)
Group R occupancies shall be equipped with Automatic Sprinkler Systems per903.2.8 (420.5)

FIRE RESISTIVE REQUIREMENTS
No required protection for Type V-B (IBC, Table 601)

FIRE AND SMOKE PROTECTION FEATURES
45% maximum openings in wall 10 to 15feet from property line (Table 705.8)

OCCUPANT LOAD FACTORS

Occupant Load Analysis:
Residential Occupancy: Occupant load 200/ Gross Sq. Ft.
10,000 approx. gross Sq. Ft. per floor 10,000/200= 50 occupants per floor
150 total occupants

Total Occupant load for building: 150 occupants

MEANS OF EGRESS
Egress Width (IBC, 1005.1)
Required Egress width Min. 36"
Required Stairway width: 44"
Vertical rise: 12' (IBC, 1009.7)

Maximum Egress travel distance to exit 250 (sprinklered (1017.2)

CODE LEGEND:

- 1 HOUR FIRE PARTITION
- 1 HOUR FIRE BARRIER
- 1 HOUR RATED UNIT DEMISING WALL

CODE NOTES:

CN1.1 SHADED AREAS INDICATE 1 HOUR RATED CORRIDOR AND EGRESS PATH. WALL RATING AT EDGE THIS AREA SHALL BE RATED 1 HOUR.

CN1.2 SHADED WALLS INDICATE UNIT DEMISING WALLS/ UNIT CORRIDOR WALLS WITH 1 HOUR RATING AS PER IBC 420.2 AND 708.3, WITH STC RATING OF 51. NOTE: EXCEPTION ONLY REQUIRES 30 MIN. FOR SPRINKLERED BUILDINGS.

CN1.3 1 HOUR FIRE PARTITION AS PER IBC SEC. 708

CN1.4 1 HOUR FIRE BARRIER AS PER IBC SEC. 1023.2, AND 707 AT STAIR AND ELEVATOR ENCLOSURES

CN1.5 NO RATING IS REQUIRED FOR EXTERIOR WALLS AS PER TABLE 601, EXTERIOR BEARING WALLS, TYPE VB.

CN1.6 FIRE SEPERATION DISTANCE FROM PROPERTY LINE IS GREATER THAN 10' (10'-6" OFFSET), AS PER IBC, SEC. 705.8, MAXIMUM PERCENTAGE OF EXTERIOR WALL OPENINGS, UNPROTECTED, IS 45%. APPROXIMATE SQ. FOOTAGE OF OPENINGS ON NORTH WALL IS 1,292 SQ. FT. IN APPROX. 5,360 SQ. FT. OF WALL= 24%. ALL OTHER WALLS ARE GREATER THAN 30' AWAY FROM PROPERTY LINE, NO RESTRICTIONS ON OPENINGS.

CN1.7 SUPPORTING CONSTRUCTION OF 1 HOUR HORIZONTAL ASSEMBLIES SHALL BE RATED 1 HOUR AS PER 7.11.2.3.

CN2.1 TYPE A UNIT AS PER IBC 1107.2 AND ANSI 1003

CN2.2 TYPE B UNIT AS PER IBC 1107.2 AND ANSI 1004

CN3.1 MAXIMUM EGRESS DISTANCE IS APPROX. 180' (SHOWN DASHED).

HGF ARCHITECTS INC.

STATE OF COLORADO
AMY G. HURTIG-SMITH
400418
LICENSED ARCHITECT

Lazarus Designs
719.360.3164
ron@lazarusdesignsllc.com
lazarusdesigns.blogspot.com

PROJECT NUMBER:	2019.90
PHASE:	PERMIT SET
PHASE ISSUE DATE:	4-27-20
DESIGNED BY:	RBP/AHS
SCALE:	As indicated

CODE ANALYSIS

SHEET ISSUE DATE: 04/27/20

CA1.1

THE RIGHT PLACE
CARDINAL CAPITAL MGMT.
A SUPPORTIVE HOUSING FACILITY

THE RIGHT PLACE

PARCEL A RE-ARRANGEMENT OF PROPERTY
BOUNDARIES IN PUEBLO, COLORADO

LEGAL DESCRIPTION:
PARCEL A RE-ARRANGEMENT OF PROPERTY BOUNDARIES (RECEPTION NO. 1547379)

PUEBLO COUNTY ASSESSOR PARCEL NO:
419437006

SIZE: 35,083-SF (0.81-AC)

ZONE: R-5

PROPOSED DEVELOPED IMPERVIOUS AREA
28,097-SF (0.645-AC)

SITE NOTES:

1. THE CONTRACTOR SHALL ENSURE THAT ALL SITE CONSTRUCTION IS IN ACCORDANCE WITH THE LOCALLY ADOPTED EDITION OF THE INTERNATIONAL BUILDING CODE (2015 IBC), AND ANY OTHER CODES OF APPLICABLE REGULATORY AGENCIES.
2. THE CONTRACTOR SHALL ENSURE THAT ALL NEW CONSTRUCTION CONFORMS TO LATEST EDITION OF THE CITY OF PUEBLO STANDARD CONSTRUCTION SPECIFICATIONS AND STANDARD DETAILS.
3. THE PROJECT SPECIFICATIONS ARE INCORPORATED HEREIN AS IF REPRODUCED IN FULL. WHERE CONFLICTS OCCUR, IF ANY, BETWEEN PROJECT SPECIFICATIONS, GEOTECHNICAL REPORT, PROJECT PLANS, CITY OF PUEBLO STANDARD CONSTRUCTION SPECIFICATIONS AND STANDARD DETAILS OR OTHER DOCUMENTS RELATED TO THIS PROJECT THE MOST STRINGENT REQUIREMENT SHALL APPLY UNLESS APPROVED BY THE ENGINEER.
4. THE CONTRACTOR SHALL BE RESPONSIBLE FOR THE PROTECTION OF EXISTING ROADWAYS, DRIVEWAYS, AND STRUCTURES. DAMAGE TO EXISTING FEATURES THAT ARE NOT TO BE DISTURBED AS PART OF THIS PROJECT SHALL BE REPAIRED BY THE CONTRACTOR AT HIS EXPENSE TO THE SATISFACTION OF THE OWNER, ENGINEER AND APPROVING AUTHORITY.
5. THE CONTRACTOR SHALL VERIFY ALL DIMENSIONS AND CONDITIONS IN THE FIELD PRIOR TO COMMENCING WORK. ANY DISCREPANCIES SHALL BE REPORTED TO THE ENGINEER AND RESOLVE PRIOR TO COMMENCING WORK.
6. THE CONTRACTOR SHALL OBTAIN ALL NECESSARY PERMITS AND APPROVALS PRIOR TO COMMENCING WORK.
7. ALL SITE CONSTRUCTION SHALL BE IN ACCORDANCE WITH THE PROJECT PLANS, SPECIFICATIONS, GEOTECHNICAL REPORT AND THE LATEST EDITION OF THE INTERNATIONAL BUILDING CODE (IBC) AS WELL AS LOCAL REQUIREMENTS AND ANY OTHER CODES OF APPLICABLE REGULATORY AGENCIES.
8. THE CONTRACTOR SHALL PERFORM ALL EXCAVATION, BACKFILL, COMPACTION, SUBGRADE PREPARATION, UTILITY TRENCHING, ETC. IN ACCORDANCE WITH THE PROJECT PLANS, SPECIFICATIONS AND GEOTECHNICAL REPORT.
9. CONTRACTOR IS RESPONSIBLE FOR ENSURING THAT NEW ASPHALT IS PLACED PER GEOTECHNICAL REPORT.
11. CONCRETE FOR CURB & GUTTER, PANS, SIDEWALKS, DRIVEWAYS, ETC. SHALL BE 4500 PSI (PER GEOTECHNICAL REPORT) AT 28 DAYS, 6 SACK MIX, TYPE II OR TYPE V CEMENT WITH 6%± AIR ENTRAINMENT, SLUMP 3"-5" MAX.

SANITARY SEWER NOTES:

1. SANITARY SEWER INCLUDING PIPE, TRENCHING, AND MANHOLES SHALL BE FURNISHED AND INSTALLED PER THE LATEST EDITION OF THE CITY OF PUEBLO STANDARD SPECIFICATIONS AND STANDARD DETAILS.
2. CONTRACTOR SHALL COORDINATE WITH CITY OF PUEBLO WASTEWATER DEPARTMENT PRIOR TO COMMENCEMENT OF WORK.

WATER NOTES:

1. CONTRACTOR SHALL COORDINATE WITH THE PUEBLO BOARD OF WATER WORKS PRIOR TO CONSTRUCTION.
2. WATER AND FIRE WATER TAPS, SERVICE LINES, VALVES, FIRE HYDRANT, THRUST BLOCKS, ETC. SHALL CONFORM TO THE PUEBLO BOARD OF WATER WORKS SPECIFICATIONS AND DETAILS. CONTRACTOR SHALL COORDINATE WITH PUEBLO BOARD OF WATER WORKS PRIOR TO COMMENCEMENT OF WORK.

GENERAL UTILITY NOTES:

1. THE UTILITY INFORMATION SHOWN ON THE PLANS WAS TAKEN FROM UTILITY COMPANY RECORDS AND SURVEY LOCATES. THE CONTRACTOR IS RESPONSIBLE FOR MAKING HIS OWN DETERMINATIONS AS TO THE TYPE AND LOCATION OF ALL UTILITIES AS MAY BE NECESSARY TO MAINTAIN SERVICE AND AVOID DAMAGE THERETO. THE CONTRACTOR AGREES TO BE FULLY RESPONSIBLE FOR ANY DAMAGE WHICH MIGHT OCCUR DUE TO HIS FAILURE TO EXACTLY LOCATE AND PRESERVE ANY AND ALL UTILITIES.
2. ALL WORK WHETHER SPECIFICALLY CALLED FOR OR NOT SHALL BE CONSTRUCTED UNDER THE LATEST EDITION OF THE I.B.C., N.E.C., U.P.C. AND U.M.C. AND IN ACCORDANCE WITH THE PROJECT SPECIFICATIONS, PROJECT GEOTECHNICAL REPORT AS WELL AS THE REQUIREMENTS AND STANDARD DETAILS OF THE CITY OF PUEBLO. WHERE CONFLICTS OCCUR, RESOLVE PER GENERAL NOTE #3.
3. ABANDON AND/OR REMOVE ALL EXISTING UTILITY SERVICES THAT INTERFERE WITH PROPOSED CONSTRUCTION. ALL WORK MUST BE COORDINATED WITH THE UTILITY COMPANIES AND SHALL COMPLY WITH ALL APPLICABLE CODES AND SPECIFICATIONS.
4. PROVIDE ALL MATERIALS, WORK, COORDINATION, ETC. AS REQUIRED TO ENSURE COMPLETE AND FUNCTIONING UTILITY SERVICES WHETHER SPECIFICALLY INDICATED ON THE PLANS OR NOT.
5. ALL MANHOLES, WATER VALVES, GAS VALVES, MONUMENT BOXES, ETC. SHALL BE ADJUSTED TO FINISHED GRADE AND SHALL INCLUDE ASPHALT COLLARS AS PER CITY OF PUEBLO STANDARD DETAIL SD12.
6. TRACER WIRE SHALL BE BURIED WITH ALL NON-METALIC UNDERGROUND UTILITIES.
7. CONTRACTOR SHALL COORDINATE ELECTRIC, GAS, FIBER OPTIC, AND OTHER UTILITY WORK WITH APPROPRIATE UTILITY COMPANY PRIOR TO COMMENCEMENT OF WORK.

811 Know what's below. Call before you dig.

CALL BEFORE YOU DIG!
PRIOR TO ANY EXCAVATION CONTRACTOR SHALL ARRANGE FOR UTILITY LOCATES. DO NOT PROCEED WITH EXCAVATION PRIOR TO COMPLETION OF UTILITY LOCATES.

THIS CONSTRUCTION PLAN COMPLIES WITH ALL CITY OF PUEBLO PUEBLO DESIGN STANDARDS, WITH THE MOST CURRENT STANDARD CONSTRUCTION SPECIFICATIONS AND DETAILS

ADA COMPLIANCE NOTE:
TO THE BEST OF OUR KNOWLEDGE, THE DESIGN OF THE NEW IMPROVEMENTS MEET THE PROVISIONS OF THE AMERICANS WITH DISABILITY ACT

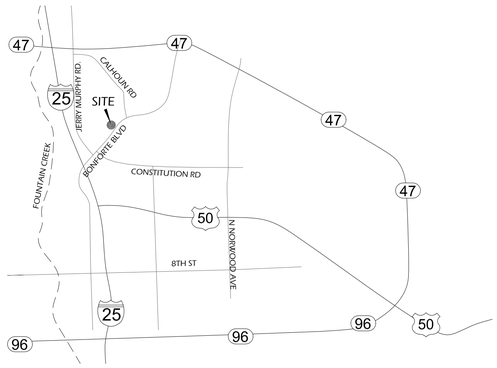

VICINITY MAP
NTS

SHEET INDEX

C1.0	CIVIL COVER SHEET
C2.0	SITE PLAN
C3.0	SITE UTILITY PLAN
C4.0	GRADING & DRAINAGE PLAN

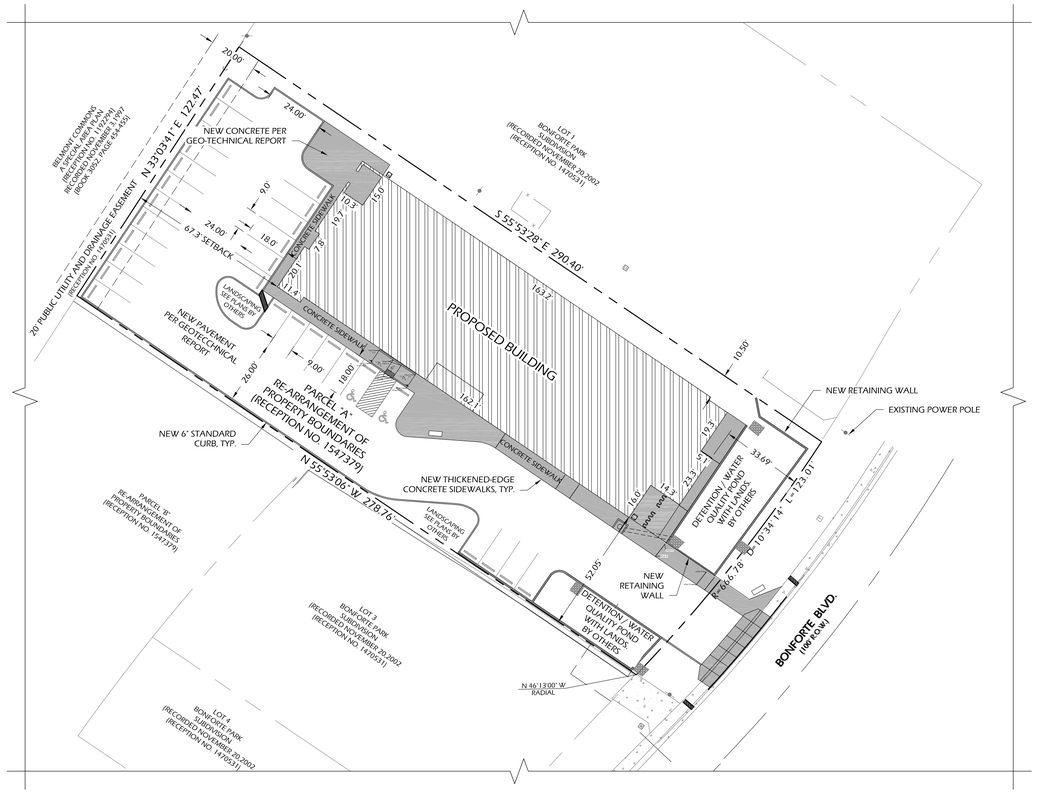

PLOT PLAN
0 30 60
SCALE: 1"=30'

DKHorn Engineering & Design Inc.
1910 Aspen Circle
Pueblo, CO 81006
Phone (719) 696-8274
darlene@dkheng.com
tony@dkheng.com

PROJECT NUMBER: 2020-D033-A
PHASE: Permit Set
PHASE ISSUE DATE:
DESIGNED BY: DKH
SCALE: 1:30

CIVIL COVER SHEET

SHEET ISSUE DATE: 04/27/20

C1.0

THE RIGHT PLACE
CARDINAL CAPITAL MGMT.
A SUPPORTIVE HOUSING FACILITY

HGF ARCHITECTS INC.

SHEET LEGEND

- Existing Concrete
- Proposed Building
- Proposed Concrete
- Proposed Curb
- Proposed Major Contour
- Proposed Minor Contour
- Existing Major Contour
- Existing Minor Contour
- Existing Easement Line
- Existing Wood Fence — O
- Existing Chain-link Fence — X
- Existing U.g. Electric Line — UGE
- Ex. Overhead Electric Line — OHE
- Existing Water Line — W
- Existing Sanitary Sewer Line — SS
- Existing Storm Sewer Line — ST
- Existing Telephone Line — T
- Existing Fiber Optic Line — FO
- Existing Natural Gas Line — G
- Existing Power Pole
- Existing Electric Guy Wire
- Existing Telephone Riser
- Existing Water Meter
- Existing Gas Meter
- Existing Sewer Manhole
- Proposed Gas Meter
- Proposed Electric Meter
- Proposed Water Meter
- Proposed Ungnd Electric Line — UGE
- Proposed Water Line — W
- Pro. Sanitary Sewer Line — SS
- Proposed Natural Gas Line — G

SITE INFORMATION:

LEGAL DESCRIPTION:
PARCEL A RE-ARRANGEMENT OF PROPERTY BOUNDARIES (RECEPTION NO. 1547379)

PUEBLO COUNTY ASSESSOR PARCEL NO:
419437006

SIZE: 35,083-SF (0.81-AC)

ZONE: R-5

PROPOSED DEVELOPED IMPERVIOUS AREA
28,097-SF (0.645-AC)

PARKING CALCULATIONS:

PARKING REQUIRED:

APARTMENT COMPLEX - 1.5 PARKING SPACES PER UNIT
HANDICAP SPACES - 1 PER EVERY 25 STANDARD SPACES
VAN ACCESSIBLE HANDICAP SPACES - 1 PER 4 HANDICAP SPACES

PARKING CALCULATIONS:

1.5 SPACES X 35 UNITS.....52.5 SPACES X 50% VARIANCE = 26.25 (27 SPACES)
HANDICAP SPACES - 27 / 25 = 1.08 (2 SPACES)
VAN ACCESSIBLE HANDICAP SPACES = 1 SPACE

PARKING PROVIDED:

STANDARD SURFACE SPACES (9'Wx18'D).....26
COMPACT SURFACE SPACES (8.5'Wx18'D).....0
ACCESSIBLE SURFACE SPACES (8'Wx18'D W/5'AISLE).....1
VAN-ACCESSIBLE SURFACE SPACES (8'Wx18'D W/8'AISLE).....1
TOTAL PROVIDED.....28

Know what's below. Call before you dig.

CALL BEFORE YOU DIG!
PRIOR TO ANY EXCAVATION CONTRACTOR SHALL ARRANGE FOR UTILITY LOCATES. DO NOT PROCEED WITH EXCAVATION PRIOR TO COMPLETION OF UTILITY LOCATES.

THIS CONSTRUCTION PLAN COMPLIES WITH ALL CITY OF PUEBLO PUEBLO DESIGN STANDARDS. WITH THE MOST CURRENT STANDARD CONSTRUCTION SPECIFICATIONS AND DETAILS

ADA COMPLIANCE NOTE:
TO THE BEST OF OUR KNOWLEDGE, THE DESIGN OF THE NEW IMPROVEMENTS MEET THE PROVISIONS OF THE AMERICANS WITH DISABILITY ACT

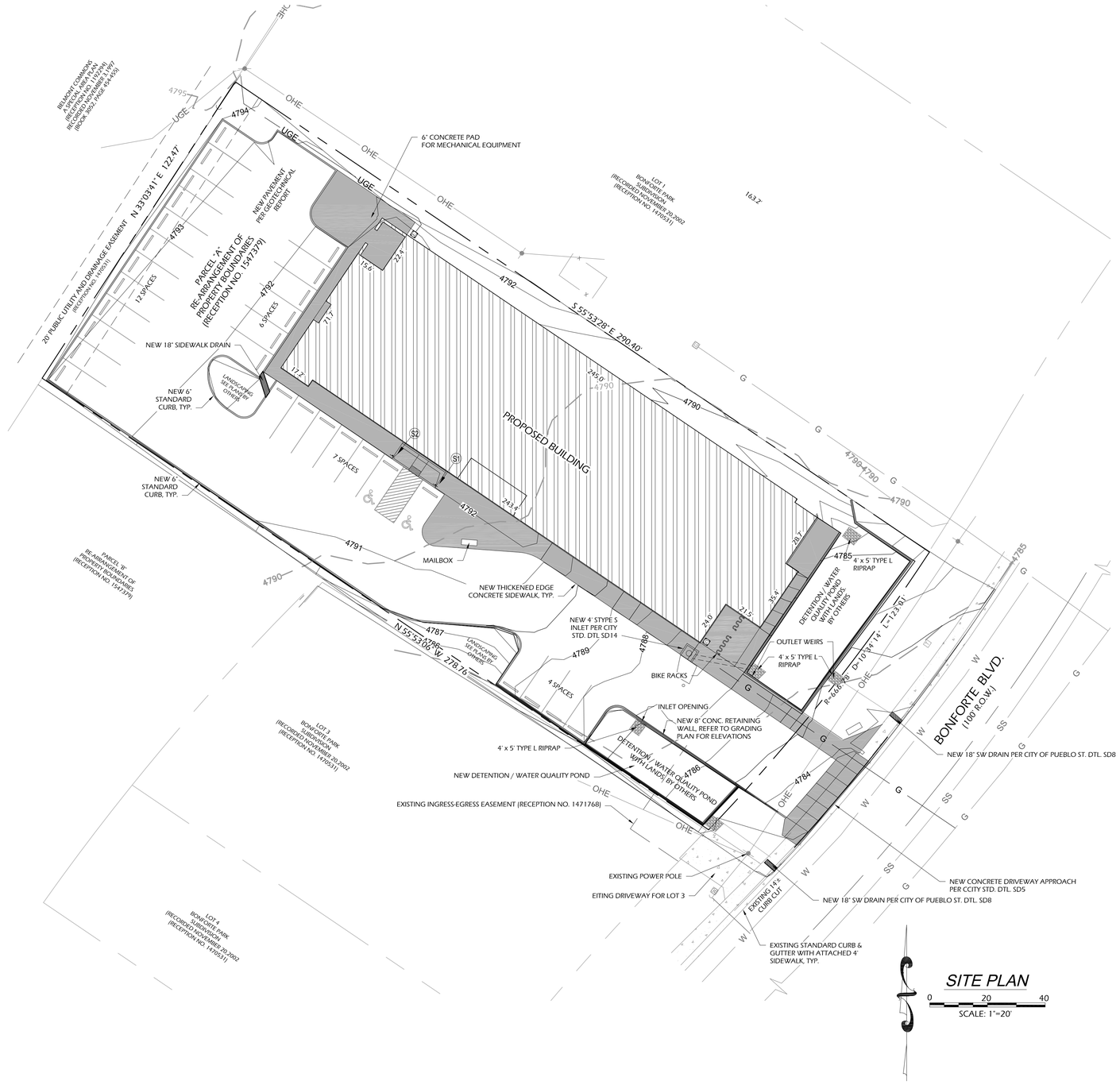

SITE PLAN

0 — 20 — 40
SCALE: 1"=20'

SIGNAGE & STRIPING NOTES:

RESERVED PARKING
VAN ACCESSIBLE

1. PARKING SPACES SHALL BE 9' WIDE BY 18' LONG UNLESS NOTED OTHERWISE.
2. STRIPING SHALL BE 4" WHITE. CURB HEAD AND/OR WHEEL STOPS IN FRONT OF HANDICAP SPACES SHALL BE PAINTED ACCESSIBILITY BLUE.
3. PAINT SHALL BE WATERBORNE LATEX TRAFFIC PAINT COMPLYING WITH CDOT STANDARDS 708.05, 713.08 AND 627.04.
4. SIGNAGE SHALL BE AS FOLLOWS:
   S1 ..... "RESERVED PARKING" SIGN R7-8, 12" X 18"
   S2 ..... "RESERVED PARKING" SIGN R7-8, 12" X 18" AND "VAN ACCESSIBLE" SIGN R7-8A

HGF ARCHITECTS INC.

COLORADO REGISTERED
DARLENE KAY EVETTS HOHN
42686
4/27/2020
PROFESSIONAL ENGINEER

DK Hom Engineering & Design Inc.
1910 Aspen Circle
Pueblo, CO 81006
Phone (719) 696-8274
darlene@dkheng.com
tony@dkheng.com

PROJECT NUMBER:	2020-D033-A
PHASE:	Permit Set
PHASE ISSUE DATE:	
DESIGNED BY:	DKH
SCALE:	1:30

SITE PLAN

SHEET ISSUE DATE: 04/27/20

C2.0

THE RIGHT PLACE — A SUPPORTIVE HOUSING FACILITY
CARDINAL CAPITAL MGMT.

SHEET LEGEND

Existing Concrete	
Proposed Building	
Proposed Concrete	
Proposed Curb	
Existing Wood Fence	O
Existing Chain-link Fence	X
Existing U.g. Electric Line	UGE
Ex. Overhead Electric Line	OHE
Existing Water Line	W
Existing Sanitary Sewer Line	SS
Existing Storm Sewer Line	ST
Existing Telephone Line	T
Existing Fiber Optic Line	FO
Existing Natural Gas Line	G
Existing Power Pole	
Existing Electric Guy Wire	
Existing Telephone Riser	T
Existing Water Meter	W
Existing Gas Meter	G
Existing Sewer Manhole	S
Proposed Gas Meter	G
Proposed Electric Meter	E
Proposed Water Meter	W
Proposed Ungnd Electric Line	UGE
Proposed Water Line	W
Pro. Sanitary Sewer Line	SS
Proposed Natural Gas Line	G
Underground Roof Drain	RD

SITE INFORMATION:

LEGAL DESCRIPTION:
PARCEL A RE-ARRANGEMENT OF PROPERTY BOUNDARIES (RECEPTION NO. 1547379)

PUEBLO COUNTY ASSESSOR PARCEL NO:
419437006

SIZE: 35,083-SF (0.81-AC)

ZONE: R-5

PROPOSED DEVELOPED IMPERVIOUS AREA
28,097-SF (0.645-AC)

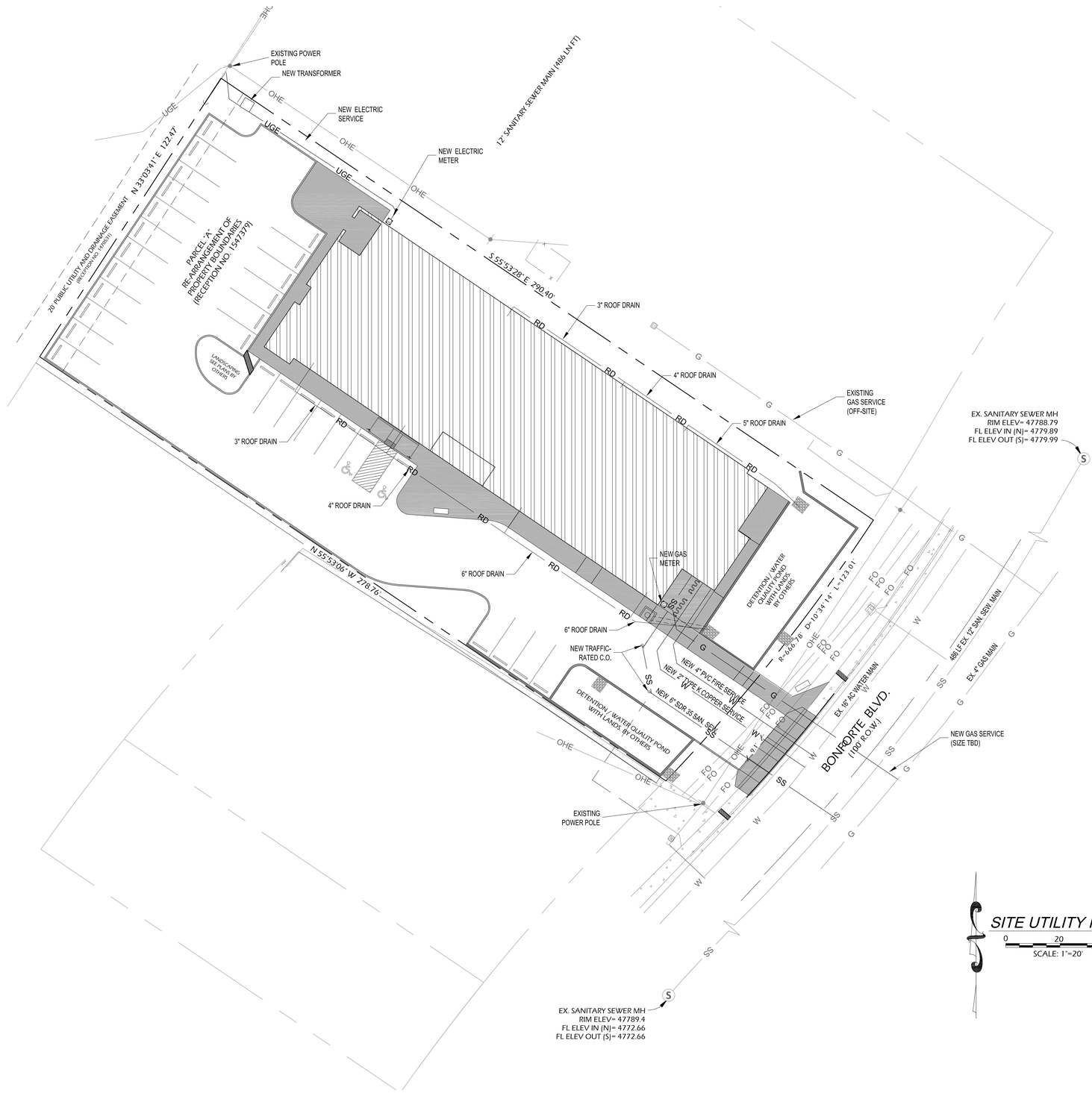

SITE UTILITY PLAN

0 20 40

SCALE: 1"=20'

Know what's below. Call before you dig.

CALL BEFORE YOU DIG!
PRIOR TO ANY EXCAVATION CONTRACTOR SHALL ARRANGE FOR UTILITY LOCATES. DO NOT PROCEED WITH EXCAVATION PRIOR TO COMPLETION OF UTILITY LOCATES.

THIS CONSTRUCTION PLAN COMPLIES WITH ALL CITY OF PUEBLO PUEBLO DESIGN STANDARDS. WITH THE MOST CURRENT STANDARD CONSTRUCTION SPECIFICATIONS AND DETAILS

ADA COMPLIANCE NOTE:
TO THE BEST OF OUR KNOWLEDGE, THE DESIGN OF THE NEW IMPROVEMENTS MEET THE PROVISIONS OF THE AMERICANS WITH DISABILITY ACT

HGF ARCHITECTS INC.

COLORADO REGISTERED DARLENE KAY EVETTS HORN 42686 4/27/2020 PROFESSIONAL ENGINEER

DK Horn Engineering & Design Inc.
1910 Aspen Circle
Pueblo, CO 81006
Phone (719) 696-8274
darlene@dkheng.com
tony@dkheng.com

PROJECT NUMBER: 2020-D033-A
PHASE: Permit Set
PHASE ISSUE DATE:
DESIGNED BY: DKH
SCALE: 1:30

SITE UTILITY PLAN

SHEET ISSUE DATE: 04/27/20

C3.0

THE RIGHT PLACE
CARDINAL CAPITAL MGMT.
A SUPPORTIVE HOUSING FACILITY

SHEET LEGEND

- Existing Concrete
- Proposed Building
- Proposed Concrete
- Proposed Curb
- Proposed Major Contour
- Proposed Minor Contour
- Existing Major Contour
- Existing Minor Contour
- Existing Easement Line
- Existing Wood Fence — O
- Existing Chain-link Fence — X
- Existing U.g. Electric Line — UGE
- Ex. Overhead Electric Line — OHE
- Existing Water Line — W
- Existing Sanitary Sewer Line — SS
- Existing Storm Sewer Line — ST
- Existing Telephone Line — T
- Existing Fiber Optic Line — FO
- Existing Natural Gas Line — G
- Existing Power Pole
- Existing Electric Guy Wire
- Existing Telephone Riser — T
- Existing Water Meter — W
- Existing Gas Meter — G
- Existing Sewer Manhole — S
- Proposed Gas Meter — G
- Proposed Electric Meter — E
- Proposed Water Meter — W
- Proposed Ungnd Electric Line — UGE
- Proposed Water Line — W
- Pro. Sanitary Sewer Line — SS
- Proposed Natural Gas Line — G

SITE INFORMATION:

LEGAL DESCRIPTION:
PARCEL A RE-ARRANGEMENT OF PROPERTY BOUNDARIES (RECEPTION NO. 1547379)

PUEBLO COUNTY ASSESSOR PARCEL NO:
419437006

SIZE: 35,083-SF (0.81-AC)

ZONE: R-5

PROPOSED DEVELOPED IMPERVIOUS AREA
28,097-SF (0.645-AC)

Know what's below. Call before you dig.

CALL BEFORE YOU DIG!
PRIOR TO ANY EXCAVATION CONTRACTOR SHALL ARRANGE FOR UTILITY LOCATES. DO NOT PROCEED WITH EXCAVATION PRIOR TO COMPLETION OF UTILITY LOCATES.

THIS CONSTRUCTION PLAN COMPLIES WITH ALL CITY OF PUEBLO DESIGN STANDARDS. WITH THE MOST CURRENT STANDARD CONSTRUCTION SPECIFICATIONS AND DETAILS

ADA COMPLIANCE NOTE:
TO THE BEST OF OUR KNOWLEDGE, THE DESIGN OF THE NEW IMPROVEMENTS MEET THE PROVISIONS OF THE AMERICANS WITH DISABILITY ACT

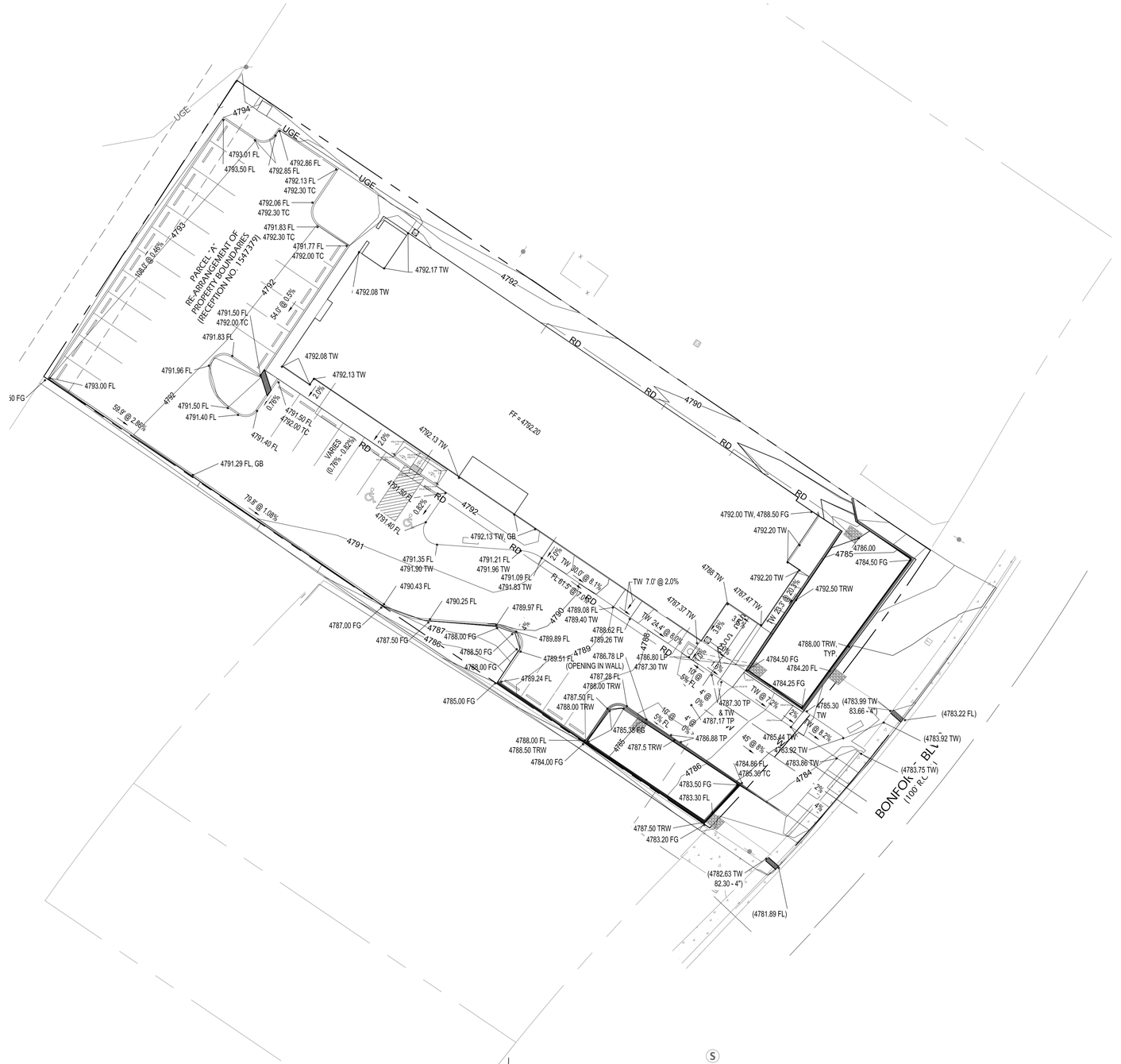

SITE GRADING PLAN

0 20 40
SCALE: 1"=20'

HGF ARCHITECTS INC.

COLORADO REGISTERED DARLENE KAY EVERTS HORN 42686 4/27/2020 PROFESSIONAL ENGINEER

DK Horn Engineering & Design Inc.
1910 Aspen Circle
Pueblo, CO 81006
Phone (719) 696-8274
darlene@dkheng.com
tony@dkheng.com

PROJECT NUMBER:	2020-D033-A
PHASE:	Permit Set
PHASE ISSUE DATE:	
DESIGNED BY:	DKH
SCALE:	1:30

GRADING & DRAINAGE PLAN

SHEET ISSUE DATE: 04/27/20

C4.0

THE RIGHT PLACE
CARDINAL CAPITAL MGMT.
A SUPPORTIVE HOUSING FACILITY

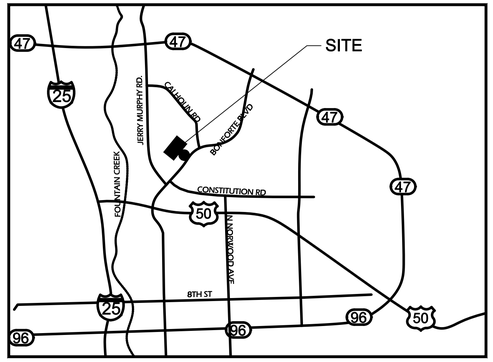

VICINITY MAP
NTS

LAYOUT NOTE

CONTRACTOR IS RESPONSIBLE FOR INSTALLING ALL LANDSCAPE SHOWN ON THIS PLAN. ANY DEVIATIONS FROM THIS PLAN ARE TO BE APPROVED BY OWNER'S REPRESENTATIVE OR LANDSCAPE ARCHITECT. DEVIATIONS FROM THE APPROVED PLAN WILL REQUIRE APPROVAL FROM THE CITY OF PUEBLO.

CITY INSPECTION NOTE

THE DESIGN PROFESSIONAL OF RECORD IS TO COMPLETE THE CITY INSPECTION CHECKLIST BASED ON APPROVED LANDSCAPE PLAN. THIS SHOULD REQUIRE LIMITED CONSTRUCTION OBSERVATION VISITS TO ACCURATELY COMPLETE THE CHECKLIST. CONTACT LANDSCAPE ARCHITECT PRIOR TO CONSTRUCTION TO COORDINATE INSPECTION PROCESS.

CITY NOTE

LANDSCAPE SHALL COMPLY WITH SECTIONS 17-4-7 AND 17-4-46(E)4A-E OF CITY OF PUEBLO MUNICIPAL CODE. A FINAL LANDSCAPE PLAN IS SUBJECT TO REVIEW AND APPROVAL BY THE CITY PLANNING DEPT.

IRRIGATION SYSTEM DESCRIPTION NOTE

ALL REQUIRED LANDSCAPE AREAS SHALL INCLUDE A PERMANENTLY INSTALLED AUTOMATIC IRRIGATION SYSTEM, UNLESS A PLANTING AND MAINTENANCE PLAN NOT DEPENDENT ON A PERMANENT SYSTEM HAS BEEN APPROVED BY THE CITY ADMINISTRATIVE OFFICIAL. THE USE OF IRRIGATION SYSTEM WATER CONSERVATION BEST MANAGEMENT PRACTICES ARE RECOMMENDED. DRIP SYSTEM SHALL BE INSTALLED TO IRRIGATE ALL NEW PLANT MATERIAL AND SPRAY/ROTOR SYSTEM FOR GRASS AREAS. GRASS AREAS MUST BE ZONED SEPARATELY. INSTALL BACKFLOW DEVICE PER LOCAL CODE. ALL IRRIGATION COMPONENTS SHALL BE INSTALLED PER MANUFACTURE RECOMMENDATIONS.

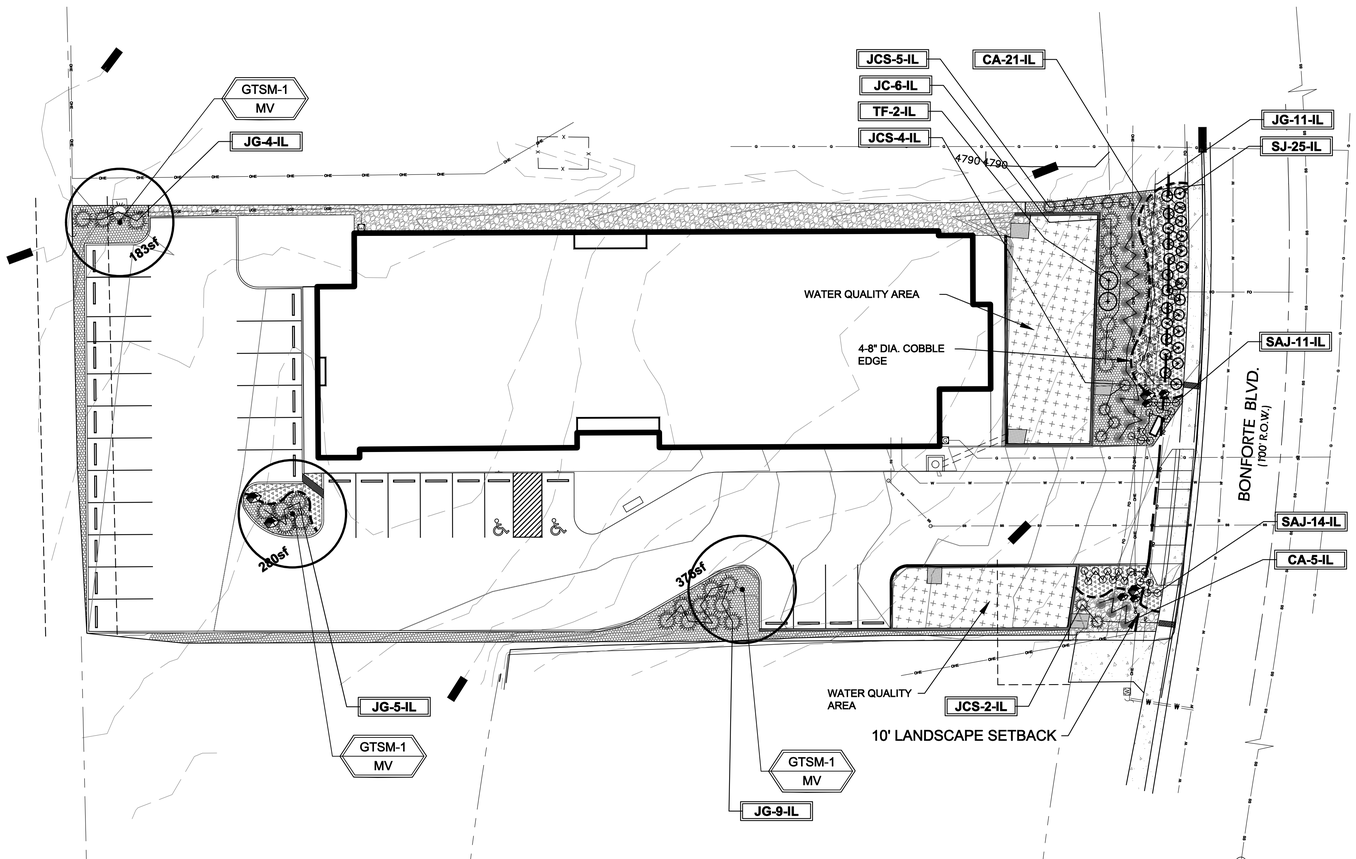

LANDSCAPE PLAN

NORTH

5 15 30
10 20 SCALE 1"= 20'

Know what's below. Call before you dig.

UTILITIES NOTE

VERIFY LOCATION AND DEPTH OF ALL UNDERGROUND UTILITIES PRIOR TO START OF WORK. CALL 811 FOR UTILITY LOCATES. TREE TRUNK PLACEMENT SHALL BE 6' MINIMUM DISTANCE FROM ANY UTILITY AND 10' FROM GAS MAINS. FOR SANITARY SEWER AND WATER MAIN LINES TREES SHALL BE PLACED A MINIMUM OF 15' FROM LINES. ANY CONFLICT BETWEEN TREE LOCATIONS AND UTILITIES SHOWN ON PLANS SHALL BE RESOLVED IN THE FIELD. CONTACT LANDSCAPE ARCHITECT FOR RECOMMENDATIONS. ALL ELECTRICAL VAULTS AND TRANSFORMERS SHALL BE KEPT CLEAR FROM PLANT MATERIAL. ALL SHRUBS TO BE LOCATED 5' CLEAR OF ALL FIRE HYDRANTS AT MATURE SIZE.

DOCUMENT NOTE

IRRESPECTIVE OF ANY OTHER TERM IN THIS DOCUMENT, LANDSCAPE ARCHITECT SHALL NOT CONTROL, OR BE RESPONSIBLE FOR CONSTRUCTION MEANS, METHODS, TECHNIQUES, SCHEDULES, SEQUENCES OR PROCEDURES, OR FOR CONSTRUCTION SAFETY OR ANY OTHER RELATED PROGRAMS, OR FOR ANOTHER PARTIES' ERRORS OR OMISSIONS OR FOR ANOTHER PARTIES' FAILURE TO COMPLETE THEIR WORK OR SERVICES IN ACCORDANCE WITH LANDSCAPE ARCHITECT'S DOCUMENTS.

PLANT SCHEDULE

Symbol	Abbr.	Quanity	Botanical Name	Common Name	Key from App. B	Mature Size wxht	Planting Size
DECIDUOUS TREES:							B & B
	GTSM	3	Gleditsia triacanthos 'Shademaster'	Shademaster Honeylocust	AD	30'	1-1/2"cal.
EVERGREEN SHRUBS:							Container
	JG	29	Euonymus fotrunei 'Coloratus'	Purpleleaf Wintercreeper	A	2'x6-8'	5 gal.
	JC	6	Juniperus scopulorum 'Cologreen'	Cologreen Juniper	125678D	6-8' x 12-15'	15 gal.
	JCS	11	Juniperus x chinensis 'Spartan'	Spartan Juniper	DA	3-4' x 12-15'	5 gal.
DECIDUOUS SHRUBS:							Container
	SBG	0	Spiraea x bumalda 'Goldflame'	Goldflame Spirea	SA	3-4' x 2-3'	5 gal.
	SJ	25	Spiraea japonica 'Majic Carpet'	Majic Carpet, Spirea	SA	1-2' x 1-2'	5 gal.
	TF	2	Forsythia intermedia 'New Hampshire'	Forsythia	D	6-8' x 6-8'	5 gal.
ORNAMENTAL GRASSES							
	CA	26	Calamagrostis acutiflora 'Karl Foerster'	Feather Reed Grass	A	1-3' x 2-3'	#1 CONT.
PERENNIALS							
	SAJ	25	Sedum 'Autumn Joy'	Autumn Joy Sedum	DA	24 x 36"	#1 CONT.

NOTE: QUANTITIES SHOWN IN PLANT SCHEDULE ARE FOR CONVENIENCE ONLY. CONTRACTOR IS RESPONSIBLE FOR INSTALLING ALL MATERIALS PER PLAN.

GROUND COVER LEGEND

SYMBOL	DESCRIPTION	APPROX. SF
	Irrigated Seed Grass. Seed Mix 'A'. Refer to notes. Submit spec to owner prior to ordering material	834 SF
	Black Granite Rock: .75" Diameter (with weed barrier) Submit sample prior to ordering material	1,041 SF
	Arkansas Tan River Rock: 1.5" Diameter (with weed barrier) Submit sample prior to ordering material	2,705 SF
	Cobble Rock-Blue/Gray River: 2-4" Diameter (with weed barrier) Submit sample prior to ordering material	1,888 SF
	Accent Boulders: Broadmoor or Denver Granite	3' DIA. see plan 18" DIA. see plan
	4-8" Dia. Cobble Edge between rock types	

NOTE: QUANTITIES SHOWN IN LEGEND ARE FOR CONVENIENCE ONLY. CONTRACTOR IS RESPONSIBLE FOR INSTALLING ALL MATERIALS PER PLAN.

GRADE NOTE

GRADE SHALL BE ESTABLISHED BASED ON GRADING PLAN BY OTHERS, AND FOR LANDSCAPE MATERIALS PER PLAN. FINAL SOIL GRADE FOR 5-12" DIAMETER ROCK AREAS SHALL BE 4" BELOW TOP OF SIDEWALK/CURB/PAVING. AT ALL OTHER ROCK AREAS GRADE SHALL BE 3" BELOW SIDEWALK/CURB. AT SOD/SEED AREAS GRADE SHALL BE 1" BELOW TOP OF SIDEWALK/CURB.

HIGHER GROUND DESIGNS, INC.
LANDSCAPE ARCHITECTURE, PLANNING & IRRIGATION DESIGN
5350 NORTH ACADEMY BLVD., STE. 207
COLORADO SPRINGS, CO 80918
Phone 719-477-1646
Fax 719-268-1122

HIGHER GROUND DESIGNS

THE RIGHT PLACE
BONFORTE BLVD.
PUEBLO, CO

PREPARED FOR:
HGF ARCHITECTS

THESE DRAWINGS ARE THE PROPERTY OF HIGHER GROUND DESIGNS, INC. AND SHALL NOT BE USED FOR ANY OTHER PURPOSE WITHOUT WRITTEN AUTHORIZATION BY HIGHER GROUND DESIGNS, INC.

CITY STAMP

NOT FOR CONSTRUCTION

JOB NUMBER 876-19
REVISIONS
ORIGINAL DATE 4-23-20
DRAWN BY JM
DESCRIPTION FINAL LANDSCAPE PLAN
SHEET NO. L1.1

NOTES:
- PRUNE ONLY DEAD OR BROKEN BRANCHES IMMEDIATELY PRIOR TO PLANTING.
- KEEP PLANTS MOIST AND SHADED UNTIL PLANTING.
- DO NOT FERTILIZE FOR AT LEAST ONE GROWING SEASON.
- AMENDED BACK FILL SHALL BE 10% SOIL FROM PLANTING PIT AND 30% ORGANIC MATERIAL.
- FOR ROOT BIND AT BOTTOM OF BALL SPLIT ROOT BALL VERTICALLY FROM BOTTOM HALFWAY TO TOP. SPREAD THE TWO HALVES OVER A MOUND OF SOIL IN PLANTING PIT.
- FOR POT BOUND PLANTS ONLY: MAKE 4-5 VERTICAL CUTS IN ROOT BALL 1" DEEP. PLANT IMMEDIATELY.

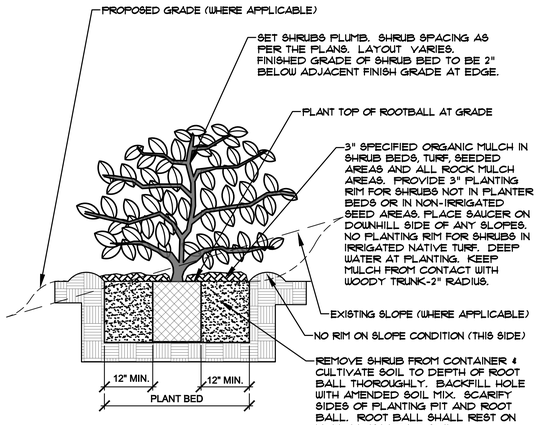

A SHRUB PLANTING DETAIL
NOT TO SCALE

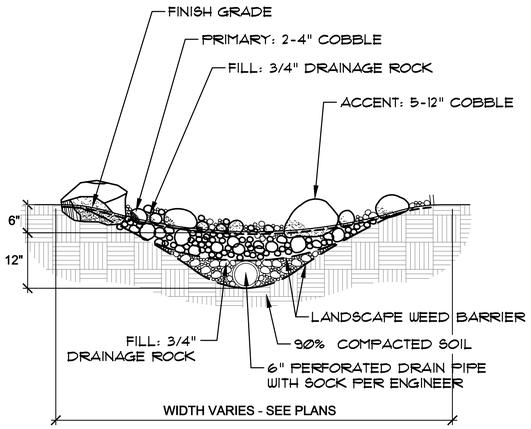

B ROCK SWALE WITH DRAIN PIPE
NTS

NOTES:
- CONTRACTOR TO INSTALL WOOD MULCH RINGS AROUND LANDSCAING AS SHOWN BELOW FOR ALL TREES, SHRUBS, PERENNIALS AND ORNAMENTAL GRASSES INSTALLED IN ROCK MULCHED AREAS. ROCK SHALL BE CLEAR FROM SHRUB IN UNIFORM CIRCLE AND WOOD MULCH APPLIED AT 2" DEPTH. SEE CONSTRUCTION DETAILS FOR INSTALLATION PROCESS.
- REFER TO LANDSCAPE PLANS FOR ALL TREE, SHRUB AND ORNAMENTAL GRASS LOCATIONS

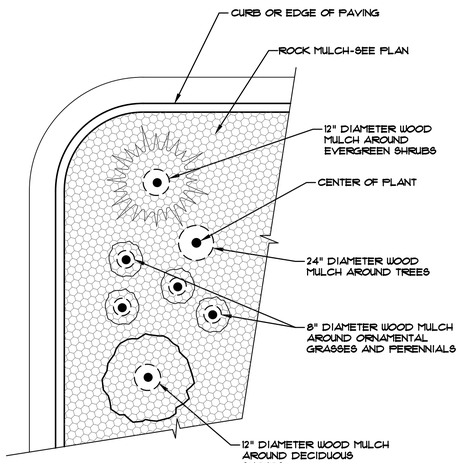

C TYPICAL PLANT MATERIAL TREATMENT
NOT TO SCALE

INSTALLATION NOTES

REMOVE EXISTING TREES, DEBRIS AND WEEDS FROM SITE PRIOR TO CONSTRUCTION (AS SHOWN PER PLAN).

LANDSCAPE CONTRACTOR IS RESPONSIBLE FOR MAINTAINING THE SITE DURING CONSTRUCTION. WEEDS AND TRASH SHALL BE REMOVED DAILY AS REQUIRED.

EXISTING TOPSOIL TO BE STOCKPILED ON-SITE AND USED DURING CONSTRUCTION TO ESTABLISH GRADES WITHIN LANDSCAPE AREAS AS SHOWN PER PLAN.

CONTRACTOR SHALL REFER TO ASSOCIATED LANDSCAPE CONTRACTORS OF COLORADO HANDBOOK (ALCC) , 2007 REVISED EDITION FOR ALL CONSTRUCTION FOR THIS SITE. CONTACT OWNER/LANDSCAPE ARCHITECT FOR QUESTIONS.

QUANTITIES SHOWN IN PLANT SCHEDULE ARE FOR CONVENIENCE ONLY. CONTRACTOR IS RESPONSIBLE FOR INSTALLING ALL PLANT MATERIAL PER PLAN.

LANDSCAPE ARCHITECT SHALL HAVE OPPORTUNITY TO INSPECT AND APPROVE ALL TREES AND ALL 1-15 GALLON MATERIAL AT JOB SITE PRIOR TO PLANTING, INCLUDING PLACEMENT INSPECTION.

GROUND COVER SHALL BE CONTINUOUS UNDER ALL SHRUBS THROUGHOUT PROJECT SITE. NO WEED BARRIER SHALL BE USED.

DO NOT PLANT SHRUBS OR TREES OF INCOMPATIBLE WATER REQUIREMENTS IMMEDIATELY ADJACENT TO ONE ANOTHER.

PLANT BACKFILL SHALL BE 60% NATIVE ON-SITE SOIL, AND 40% BREW-GRO BIOCOMP CLASS 1 (OR CITY APPROVED EQUAL)

A REPRESENTATIVE SAMPLE OF THE BOTANICAL NAME TAGS, FURNISHED BY THE NURSERY STOCK PROVIDER SHALL REMAIN ATTACHED TO THE PLANTS UNTIL FINAL INSPECTION.

LANDSCAPE CONTRACTOR SHALL NOTIFY LANDSCAPE ARCHITECT IF STORM DRAINAGE FROM ADJACENT LANDSCAPE AREAS OR BUILDING DOWNSPOUTS WILL ADVERSELY AFFECT LANDSCAPED AREAS PER THE PLAN.

ACCENT BOULDER SHALL BE SET 1/3 BELOW FINISH GRADE.

PRIOR TO INSTALLING PLANTS OR GROUND COVER BROADCAST PREEN WEED PRE-EMERGENT IN ALL PLANTING AREAS PER MANUFACTURE RECOMMENDATIONS. WWW.PREEN.COM

FIRE SIGNAGE NOTE

ANY VEGETATION THAT MAY GROW TO OR IMMEDIATELY OBSTRUCT ANY FIRE LANE SIGNAGE WILL BE PLANTED IN SUCH A WAY TO PREVENT ANY FUTURE OBSTRUCTION OF SUCH SIGNAGE.

MAINTENANCE NOTE

ON-GOING MAINTENANCE DURING CONSTRUCTION:

THE CONTRACTOR SHALL BE RESPONSIBLE FOR PROVIDING ON-GOING MAINTENANCE OF ALL COMPLETED LANDSCAPE AND IRRIGATION WORK AS DEFINED UNDER CONTRACT WITH OWNER.

BEGIN MAINTENANCE IMMEDIATELY AFTER PLANTING AND CONTINUE UNTIL LANDSCAPE WORK IS COMPLETED, ACCEPTED BY OWNER, AND IF REQUESTED A FORMAL MAINTENANCE PERIOD IS INITIATED. MAINTAIN LAWNS BY WATERING, FERTILIZING, WEEDING, MOWING, TRIMMING AND OTHER OPERATIONS SUCH AS ROLLING, REGARDING, REPLANTING AS REQUIRED THROUGH CONSTRUCTION PERIOD. REMULCH WITH NEW MULCH IN AREAS WHERE MULCH HAS BEEN DISTURBED BY CONSTRUCTION OPERATIONS SUFFICIENTLY TO NULLIFY ITS PURPOSE. CONTRACTOR SHALL REPAIR SEEDED AREAS DAMAGED BY TRAFFIC AND/OR VANDALISM DURING THE CONSTRUCTION PERIOD.

IF THE IRRIGATION SYSTEM IS NOT AVAILABLE FOR PROPER WATERING AT THE TIME OF INSTALLATION, PROVIDE AND MAINTAIN TEMPORARY PIPING, HOSES, AND LAWN WATERING EQUIPMENT AS REQUIRED TO CONVEY WATER FROM SOURCES AND TO KEEP THE LAWN AREAS UNIFORMLY MOIST AS REQUIRED FOR PROPER GROWTH. FAILURE OF THE IRRIGATION SYSTEM SHALL NOT RELIEVE THE INSTALLER OF THE RESPONSIBILITY TO PROVIDE THE REQUIRED WATER. COORDINATE WITH OWNER.

ONE-YEAR WARRANTY

AS AGREED WITH OWNER CONTRACTOR SHALL PROVIDE ONE-YEAR WARRANTY ON ALL PLANT MATERIAL, GRASSES AND IRRIGATION SYSTEM. REPLACEMENT OF DEAD, DISEASED OR SUBSTANTIALLY DAMAGED PLANT MATERIALS SHALL BE OF THE SAME OR SIMILAR TYPE AS SET FORTH IN THE LANDSCAPE PLAN. REPLACEMENT SHALL BE MADE IN A TIME PERIOD NOT EXCEEDING 15 DAYS. PLANT MATERIAL NEEDING REPLACEMENT DURING WINTER MONTHS SHALL BE REPLACED AT THE START OF THE NEXT GROWING SEASON.

THE OWNER OF THIS PROPERTY AND ANY FUTURE OWNERS SHALL BE RESPONSIBLE FOR THE PROPER LANDSCAPE AND IRRIGATION SYSTEM MAINTENANCE OF THIS SITE AND ANY RIGHT-OF-WAY AREAS BETWEEN THE CURB AND PROPERTY BOUNDARIES OF THIS SITE. MAINTENANCE OF THIS INCLUDES, BUT IS NOT LIMITED TO, IRRIGATION INSPECTIONS AND ADJUSTMENTS, IRRIGATION SYSTEM SHUT DOWN AND START UP, IRRIGATION LEAK REPAIR, LANDSCAPE WEEDING, MOWING, SEEDING, FERTILIZING, WOOD MULCH AND ROCK ADDITIONS, PRUNING AND PLANT MATERIAL REPLACEMENTS. ALL MAINTENANCE SHALL BE DONE IN ACCORDANCE WITH THE ALCC SPECIFICATIONS HANDBOOK REV EDITION 2007. OWNER SHOULD CONTACT LANDSCAPE CONTRACTOR OR LANDSCAPE ARCHITECT REGARDING ANY QUESTIONS RELATING TO THE LANDSCAPE OR IRRIGATION SYSTEM.

GRADING AND DRAINAGE NOTE

EXISTING GRADING AND DRAINAGE SHOULD BE MAINTAINED AND IS BY OTHERS. ALL GRADES SHOULD SLOPE MINIMUM AWAY FROM ALL BUILDING FOUNDATION. PRIOR TO, OR DURING CONSTRUCTION IF DRAINAGE PROBLEMS ARE IDENTIFIED CONTACT LANDSCAPE ARCHITECT AND CEASE WORK UNTIL A SOLUTION IS AGREED TO BY ALL PARTIES. HGD, INC. PREPARED THIS LANDSCAPE PLAN BASED ON EXISTING FIELD CONDITIONS AND AND IS NOT RESPONSIBLE FOR ANY DAMAGE TO BUILDING AND/OR SITE DUE TO IMPROPER GRADING AND/OR DRAINAGE.

SEEDING NOTES

SEED MIX 'A': GRASS SEED "BIORETENTION/RAIN GARDEN" MIX TO BE APPLIED AT 4LBS/1,000 SF. BROADCAST SEED, RAKE IN TO SOIL, HYDROMULCH OR APPLY EROSION BLANKET. CONTACT ARKANSAS VALLEY SEED FOR CURRENT SEED MIX BLEND.

Seed	Percentage
Switchgrass, Blackwell	4.00
Sand Bluestem, Garden Co.	3.50
Sideoats Grama, Butte Sub: Pierre	3.00
Prairie Sandreed, Goshen	3.00
Indian Ricegrass, Paloma	3.00
Western Wheatgrass, Arriba	3.00
Little Bluestem, Pastura Sub: Blaze	3.00
Alkali Sacaton	3.00
Sand Dropseed	3.00
Pasture Sage(Fringed)	0.125
Blue Aster	0.25
Blanketflower	0.50
Prairie Coneflower	0.25
Purple Prairie Clover	0.25

DEPENDING ON WEATHER, SEED SHALL BE INSTALLED WITHIN THE FOLLOWING TIME FRAMES: SEPTEMBER 1 UNTIL CONSISTENT GROUND FREEZE FOR SPRING ESTABLISHMENT (DORMANT SEEDING); SPRING THAW UNTIL JUNE 1 FOR SPRING AND SUMMER ESTABLISHMENT (ACTIVE SEEDING).

FOR HYDRO-SEEDING ALL SEEDED AREAS SHALL RECEIVE NOT LESS THAN 1 TON PER ACRE (2000 LBS) OF VIRGIN WOOD CELLULOSE HYDRO-MULCH AND 100 LBS PER ACRE OF ORGANIC TACKIFIER.

SEEDED LANDSCAPE AREAS SHALL HAVE NO BARE AREAS LARGER THAN SIX (6) SQUARE INCHES 15 DAYS AFTER GERMINATION.

FOR HYDRO-SEEDING ALL SEEDED AREAS SHALL RECEIVE NOT LESS THAN 1 TON PER ACRE (2000 LBS) OF VIRGIN WOOD CELLULOSE HYDRO-MULCH AND 100 LBS PER ACRE OF ORGANIC TACKIFIER.

SEEDED LANDSCAPE AREAS SHALL HAVE NO BARE AREAS LARGER THAN SIX (6) SQUARE INCHES 15 DAYS AFTER GERMINATION.

ALL SEEDED AREAS LESS THAN 3:1 SHALL RECEIVE NO LESS THAN 2 TONS PER ACRE (400 LBS) OF CERTIFIED WEED FREE STRAW MULCH. STRAW MULCH SHALL BE APPLIED IN A UNIFORM MANNER BY MULCH SPREADER OR BY HAND. STRAW MULCH SHALL BE CRIMPED OR ANCHORED INTO THE SEEDBED IMMEDIATELY FOLLOWING SPREADING BY USING A MULCH TILLER (CRIMPER). MULCH TILLERS SHALL HAVE ROUND, NOTCHED-BLADES SPACED 8-INCHES APART (MIN.) AND SHALL HAVE SUFFICIENT WEIGHT TO FORCE THE VEGETATIVE MULCH A MINIMUM DEPTH OF 3-INCHES INTO THE SOIL. ALL MULCH TILLING SHALL BE DONE PERPENDICULAR TO THE FLOW-LINE OF THE SLOPE (ALONG CONTOURS). HAND CRIMPING SHALL BE PERFORMED ON AREAS WHERE MECHANICAL METHODS CANNOT BE USED.

MULCH SHALL BE APPLIED TO SEEDED AREAS (INCLUDING DAMP GROUND) WITHIN 24 HOURS FOLLOWING THE COMPLETION OF SEEDING OPERATIONS FOR THE AREA. MULCHING SHALL NOT BE PERFORMED DURING ADVERSE WEATHER CONDITIONS OR WHEN WIND PREVENTS UNIFORM DISTRIBUTION. APPLICATION SHALL BE IN A MANNER TO NOT SERIOUSLY DISTURB THE SEEDBED SURFACE.

SOIL PREP NOTES

SOIL PREPARATION FOR UNDISTURBED OR COMPACTED AREAS:

A. RIP EXISTING SOIL TO A DEPTH OF NINE (9) INCHES MINIMUM IN ONE DIRECTION USING AN AGRICULTURAL RIPPER WITH TINES SPACED NO FURTHER THAN EIGHTEEN (18) INCHES APART OR TILL TO 6" DEPTH. AREAS ADJACENT TO WALKS, STRUCTURES, CURBS, ETC., WHERE THE USE OF LARGE MECHANICAL EQUIPMENT IS DIFFICULT SHALL BE WORKED WITH SMALLER EQUIPMENT OR BY HAND.

B. REMOVE ALL RUBBLE, STONES AND EXTRANEOUS MATERIAL OVER TWO (2) INCHES IN DIAMETER FROM THE SITE.

Know what's below. Call before you dig.

UTILITIES NOTE

VERIFY LOCATION AND DEPTH OF ALL UNDERGROUND UTILITIES PRIOR TO START OF WORK. CALL 811 FOR UTILITY LOCATES. TREE TRUNK PLACEMENT SHALL BE 8' MINIMUM DISTANCE FROM ANY UTILITY AND 10' FROM GAS MAINS. FOR SANITARY SEWER AND WATER MAIN LINES TREES SHALL BE PLACED A MINIMUM OF 15' FROM LINES. ANY CONFLICT BETWEEN TREE LOCATIONS AND UTILITIES SHOWN ON PLANS SHALL BE RESOLVED IN THE FIELD. CONTACT LANDSCAPE ARCHITECT FOR RECOMMENDATIONS. ALL ELECTRICAL VAULTS AND TRANSFORMERS SHALL BE KEPT CLEAR FROM PLANT MATERIAL. ALL SHRUBS TO BE LOCATED 5' CLEAR OF ALL FIRE HYDRANTS AT MATURE SIZE.

DOCUMENT NOTE

IRRESPECTIVE OF ANY OTHER TERM IN THIS DOCUMENT, LANDSCAPE ARCHITECT SHALL NOT CONTROL OR BE RESPONSIBLE FOR CONSTRUCTION MEANS, METHODS, TECHNIQUES, SCHEDULES, SEQUENCES OR PROCEDURES, OR FOR CONSTRUCTION SAFETY OR ANY OTHER RELATED PROGRAMS, OR FOR ANOTHER PARTIES' ERRORS OR OMISSIONS OR FOR ANOTHER PARTIES' FAILURE TO COMPLETE THEIR WORK OR SERVICES IN ACCORDANCE WITH LANDSCAPE ARCHITECT'S DOCUMENTS.

HIGHER GROUND DESIGNS, INC.
LANDSCAPE ARCHITECTURE, PLANNING & IRRIGATION DESIGN
5350 NORTH ACADEMY BLVD., STE. 207
COLORADO SPRINGS, CO 80918
Phone 719-477-1646
Fax 719-268-1122

HIGHER GROUND DESIGNS

THESE DRAWINGS ARE THE PROPERTY OF HIGHER GROUND DESIGNS, INC. AND SHALL NOT BE USED FOR ANY OTHER PURPOSE WITHOUT WRITTEN AUTHORIZATION BY HIGHER GROUND DESIGNS, INC.

THE RIGHT PLACE
BONFORTE BLVD.
PUEBLO, CO

PREPARED FOR:
HGF ARCHITECTS

CITY STAMP

NOT FOR CONSTRUCTION

JOB NUMBER 876-19

REVISIONS

ORIGINAL DATE 4-23-20

DRAWN BY JM

DESCRIPTION
LANDSCAPE DETAILS

SHEET NO. L1.2

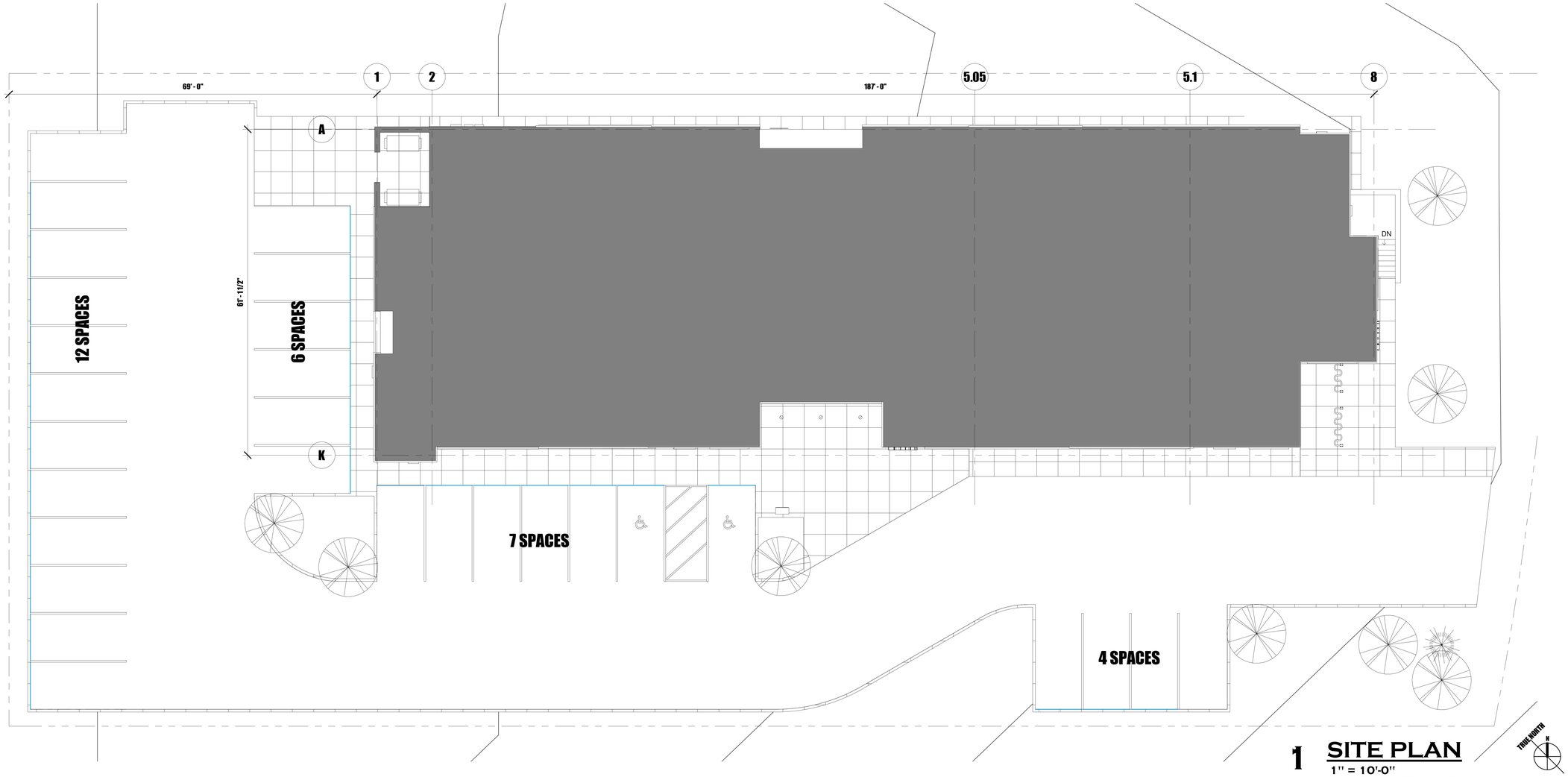

1 SITE PLAN

1" = 10'-0"

NOTE: RE: CIVIL FOR ALL SITE PLAN INFORMATION.
THIS PLAN IS FOR REFERENCE ONLY

TRUE NORTH

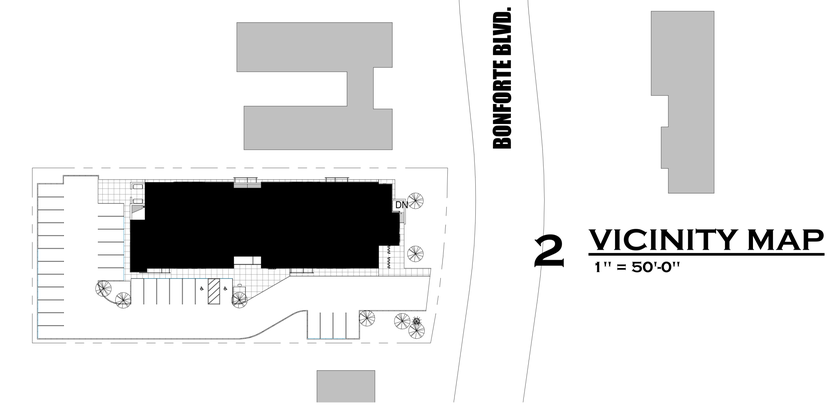

2 VICINITY MAP

1" = 50'-0"

HGF ARCHITECTS INC.

STATE OF COLORADO
AMY G. HURTIG-SMITH
40041B
LICENSED ARCHITECT

Lazarus Designs
719.360.3164
ron@lazarusdesignsllc.com
lazarusdesigns.blogspot.com

PROJECT NUMBER:	2019.90
PHASE:	PERMIT SET
PHASE ISSUE DATE:	4-27-20
DESIGNED BY:	RBP/AHS
SCALE:	As indicated

ARCHITECTURAL SITE PLAN

SHEET ISSUE DATE: 04/27/20

A1.1

THE RIGHT PLACE
A SUPPORTIVE HOUSING FACILITY
CARDINAL CAPITAL MGMT.

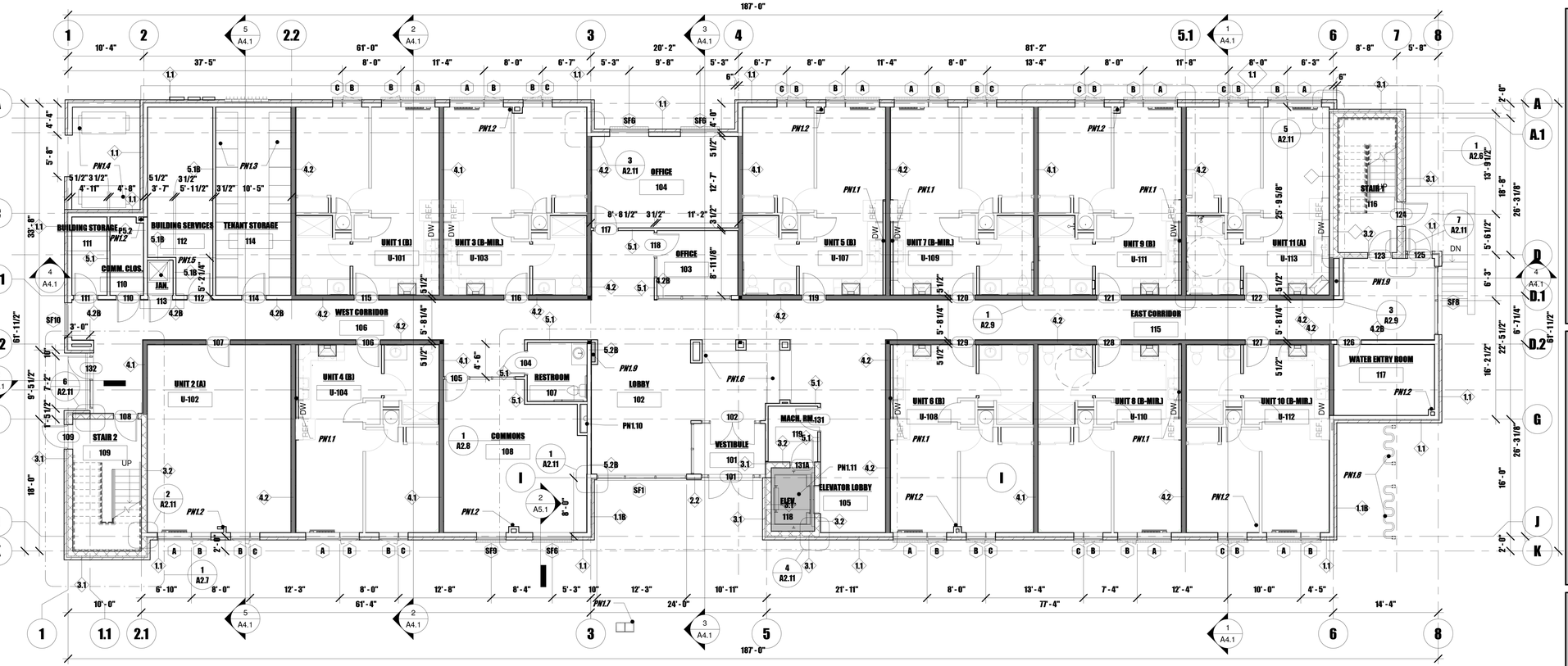

1 FLOOR PLAN-1ST FLOOR

1/8" = 1'-0"

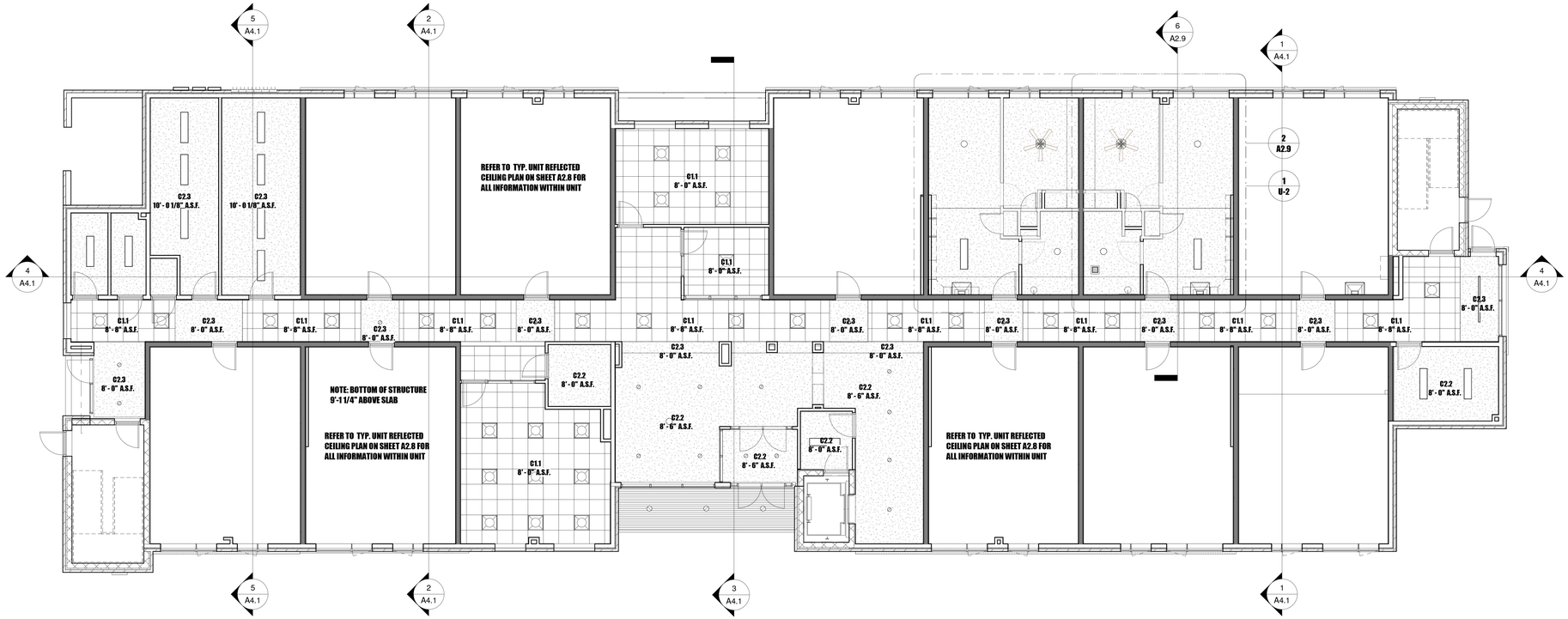

2 REFLECTED CEILING PLAN-1ST FLOOR

1/8" = 1'-0"

GENERAL NOTES:

1. **CODES:** CONTRACTOR/ BUILDER SHALL COMPLY WITH ALL APPLICABLE CODES AND REGULATIONS OF AUTHORITIES HAVING JURISDICTION, AND USE BEST PRACTICES AND CONSTRUCTION INDUSTRY STANDARDS.
2. **INTENT:** THE INTENT OF DRAWINGS AND SPECIFICATIONS ARE INTENDED TO PROVIDE THE BASIS FOR PROPER COMPLETION OF THE WORK SUITABLE FOR THE INTENDED USE OF THE OWNER. ANYTHING NOT EXPRESSLY SET FORTH BUT WHICH IS REASONABLY IMPLIED OR NECESSARY FOR PROPER PERFORMANCE/ CONSTRUCTION OF THE PROJECT SHALL BE INCLUDED.
3. **EXISTING CONDITIONS:** NOTIFY DESIGNER PRIOR TO CONSTRUCTION OF EXISTING SITE CONDITIONS DIFFERING FROM THOSE INDICATED OR IMPLIED ON THE DRAWINGS. SITE CONDITIONS ARE APPROXIMATE AND CONTRACTOR/ BUILDER SHALL VERIFY ALL PROPERTY LINES, EASEMENTS, SETBACKS, ETC. PRIOR TO ANY AND ALL CONSTRUCTION.
4. **DIMENSIONS:** UNLESS OTHERWISE NOTED, ALL DIMENSIONS ARE TO FACE OF STUD OR GRID LINES. GRID LINES ARE FACE OF STUD/ FACE OF CONC. FOUNDATION AT EXTERIOR WALLS.
5. **UNIT LAYOUT:** REFER TO UNIT LAYOUT PLAN/ A2.4 FOR DEMISING WALL LAYOUT AND REFER TO UNIT FLOOR PLANS/A2.9 FOR ALL INFORMATION REGARDING TYPICAL UNIT LAYOUT.

WALL TYPES:

REFER TO A2.4 FOR ADDITIONAL DETAIL AND INFORMATION REGARDING WALL TYPES.

W1.1 BRICK VENEER OVER TYPICAL EXTERIOR 2X6 WALL CONSTRUCTION

W2.1 STUCCO SYSTEM OVER TYPICAL EXTERIOR 2X 6 WALL CONSTRUCTION

W2.2 BOXED RIB METAL SIDING OVER TYPICAL EXTERIOR 2X6 WALL CONSTRUCTION

W3.1 BRICK VENEER OVER 8" CMU WALL

W3.2 GYP. BOARD/ FURRING OVER 8" CMU WALL

P4.1 ONE HOUR RATED WALL-TWO LAYERS GYP. BD. OVER 2X6 WOOD STUD FRAMING W/ GYP. BD. OVER 1/2" RESILIENT CHANNEL ON OTHER SIDE

P5.2 SHEAR WALL, SAME AS P4.1, ONLY 1/2" PLYWOOD OVER STUDS, WITH 5/8" GYP. BD. OVER 1/2" RES. CHANNEL ON EAST SIDE

FLOOR TYPES:

REFER TO CROSS SECTIONS AND DETAIL FOR ADDITIONAL INFORMATION.

F1.1 4" CONC. SLAB

F2.1 TYPICAL FLOOR CONSTRUCTION FOR 2ND AND 3RD FLOORS: 1 1/2" GYPCRETE TOPPING SLAB OVER ACOUSTICAL MAT OVER 3/4" PLYWOOD SHEATHING OVER PRE-MANUFACTURED WOOD FLOOR TRUSSES WITH 5/8" TYPE X GYP. BD. OVER 1/2" RESILIENT CHANNEL OVER UNDERSIDE OF FRAMING. 1 HOUR RATED FLOOR ASSEMBLY REQUIRED. UL DES. L528

CEILING TYPES:

REFER TO CROSS SECTIONS AND DETAILS FOR ADDITIONAL INFORMATION.

C1.1 2X2 EXPOSED GRID CEILING SUSPENDED BELOW 5/8" TYPE X GYP. BD. OVER FRAMING

C1.2 2X2 EXPOSED GRID CEILING SUSPENDED FROM STRUCTURE

C2.1 5/8" TYPE X GYP. BD. OVER 1/2" RESILIENT CHANNEL FURRING OVER UNDERSIDE OF FLOOR FRAMING

C2.2 5/8" GYP. BD. OVER SUSPENDED GYP. BD. FRAMING SYSTEM

C2.3 5/8" GYP. BD. OVER 2X WOOD FRAMING

PLAN NOTES:

PN1.1 DEMISING WALL BEHIND KITCHEN CABINETS SHALL BE FURRED OUT WITH 3 1/2" STUDS AND 5/8" GYP. BOARD AT LOCATIONS SHOWN. FURRED WALL SHALL TERMINATE AT EDGE OF UPPER CABINETS

PN1.2 ROOF DRAIN CHASE, RE: PLUMB.

PN1.3 STACKED 20" WIDE X 36" DEEP X 42" TALL TENANT STORAGE LOCKERS, TOTAL OF 20 LOCKERS

PN1.4 TRASH DUMPSTERS

PN1.5 36" X 36" MOP SINK

PN1.6 SEATING BENCH AS PER DET. X/XX

PN1.7 MONUMENT MAILBOX

PN1.8 BIKE RACK, TOTAL CAPACITY, 12 BIKES

PN1.9 PLUMBING/ MECH. CHASE

PN1.10 ELEC. FIREPLACE

PN1.11 HOLE-LESS HYDRAULIC ELEVATOR, OTIS 2500 SERIES, OR EQUAL

PN2.1 30" DEEP P. LAM. COUNTERTOP WITH CABINETS BELOW, RE: INTERIOR ELEVATIONS

PN2.2 P. LAM COUNTERTOP

HGF ARCHITECTS INC.

STATE OF COLORADO
AMY G. HURTIG-SMITH
400418
LICENSED ARCHITECT

Lazarus Designs
719.360.3164
ron@lazarusdesignsllc.com
lazarusdesigns.blogspot.com

PROJECT NUMBER:	2019.90
PHASE:	PERMIT SET
PHASE ISSUE DATE:	4-27-20
DESIGNED BY:	RBP/AHS
SCALE:	As indicated

1ST FLOOR PLAN

SHEET ISSUE DATE: 04/27/20

A2.1

THE RIGHT PLACE
CARDINAL CAPITAL MGMT.
A SUPPORTIVE HOUSING FACILITY



1 FLOOR PLAN-2ND FLOOR

1/8" = 1'-0"

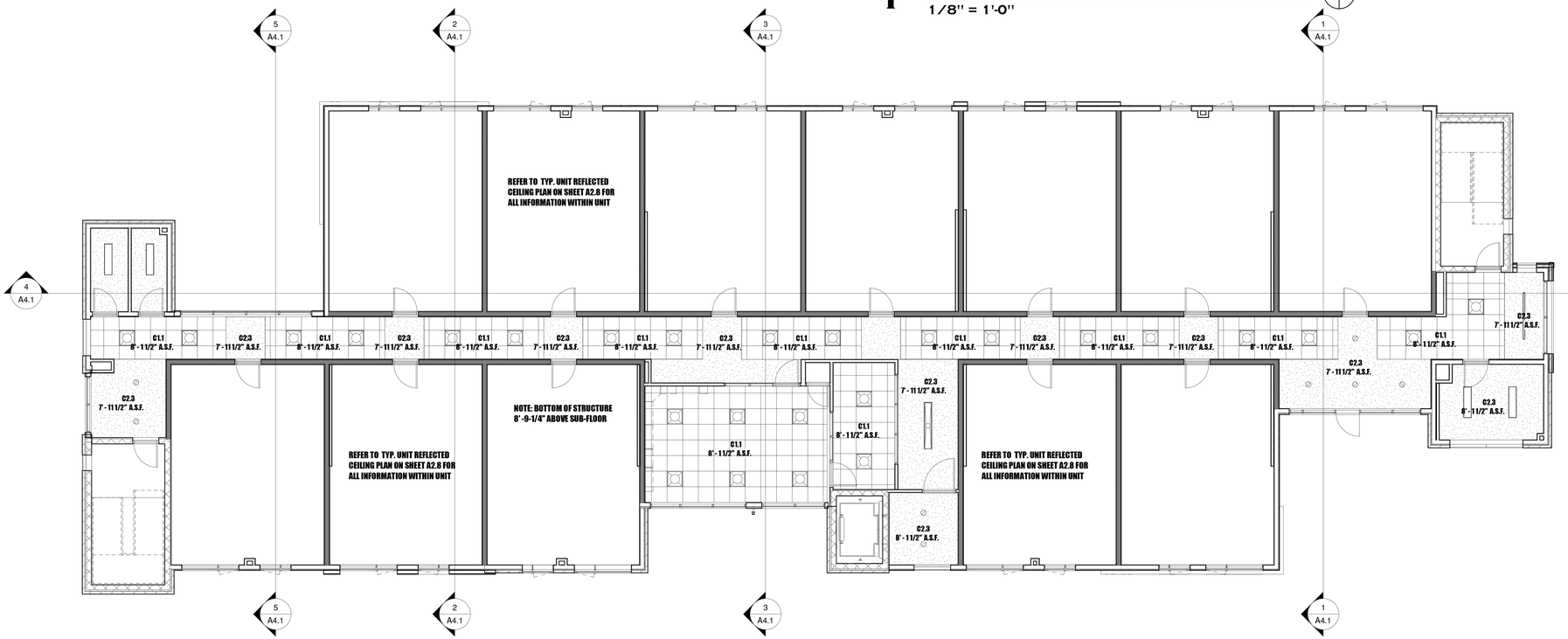

2 REFLECTED CEILING PLAN-2ND FLOOR

1/8" = 1'-0"

GENERAL NOTES:

1. **CODES:** CONTRACTOR/ BUILDER SHALL COMPLY WITH ALL APPLICABLE CODES AND REGULATIONS OF AUTHORITIES HAVING JURISDICTION, AND USE BEST PRACTICES AND CONSTRUCTION INDUSTRY STANDARDS.
2. **INTENT:** THE INTENT OF DRAWINGS AND SPECIFICATIONS ARE INTENDED TO PROVIDE THE BASIS FOR PROPER COMPLETION OF THE WORK SUITABLE FOR THE INTENDED USE OF THE OWNER. ANYTHING NOT EXPRESSLY SET FORTH BUT WHICH IS REASONABLY IMPLIED OR NECESSARY FOR PROPER PERFORMANCE/ CONSTRUCTION OF THE PROJECT SHALL BE INCLUDED.
3. **EXISTING CONDITIONS:** NOTIFY DESIGNER PRIOR TO CONSTRUCTION OF EXISTING SITE CONDITIONS DIFFERING FROM THOSE INDICATED OR IMPLIED ON THE DRAWINGS. SITE CONDITIONS ARE APPROXIMATE AND CONTRACTOR/ BUILDER SHALL VERIFY ALL PROPERTY LINES, EASEMENTS, SETBACKS, ETC. PRIOR TO ANY AND ALL CONSTRUCTION.
4. **DIMENSIONS:** UNLESS OTHERWISE NOTED, ALL DIMENSIONS ARE TO FACE OF STUD OR GRID LINES. GRID LINES ARE FACE OF STUD/ FACE OF CONC. FOUNDATION AT EXTERIOR WALLS.
5. **UNIT LAYOUT:** REFER TO UNIT LAYOUT PLAN/ A2.4 FOR DEMISING WALL LAYOUT AND REFER TO UNIT FLOOR PLANS/A2.9 FOR ALL INFORMATION REGARDING TYPICAL UNIT LAYOUT.

WALL TYPES:

REFER TO A2.4 FOR ADDITIONAL DETAIL AND INFORMATION REGARDING WALL TYPES.

W1.1 BRICK VENEER OVER TYPICAL EXTERIOR 2X6 WALL CONSTRUCTION

W2.1 STUCCO SYSTEM OVER TYPICAL EXTERIOR 2X 6 WALL CONSTRUCTION

W2.2 BOXED RIB METAL SIDING OVER TYPICAL EXTERIOR 2X6 WALL CONSTRUCTION

W3.1 BRICK VENEER OVER 8" CMU WALL

W3.2 GYP. BOARD/ FURRING OVER 8" CMU WALL

P4.1 ONE HOUR RATED WALL-TWO LAYERS GYP. BD. OVER 2X6 WOOD STUD FRAMING W/ GYP. BD. OVER 1/2" RESILIENT CHANNEL ON OTHER SIDE

P4.2 SHEAR WALL, SAME AS P4.1, ONLY 1/2" PLYWOOD OVER STUDS, WITH 5/8" GYP. BD. OVER 1/2" RES. CHANNEL ON EAST SIDE

FLOOR TYPES:

REFER TO CROSS SECTIONS AND DETAIL FOR ADDITIONAL INFORMATION.

F1.1 4" CONC. SLAB

F2.1 TYPICAL FLOOR CONSTRUCTION FOR 2ND AND 3RD FLOORS: 1 1/2" GYPCRETE TOPPING SLAB OVER ACOUSTICAL MAT OVER 3/4" PLYWOOD SHEATHING OVER PRE-MANUFACTURED WOOD FLOOR TRUSSES (2X10 OR LVL FRAMING WHERE SHOWN) WITH 5/8" TYPE X GYP. BD. OVER 1/2" RESILIENT CHANNEL OVER UNDERSIDE OF FRAMING. 1 HOUR RATED FLOOR ASSEMBLY REQUIRED. UL DES. L528

CEILING TYPES:

REFER TO CROSS SECTIONS AND DETAILS FOR ADDITIONAL INFORMATION.

C1.1 2X2 EXPOSED GRID CEILING SUSPENDED BELOW 5/8" TYPE X GYP. BD. OVER FRAMING

C1.2 2X2 EXPOSED GRID CEILING SUSPENDED FROM STRUCTURE

C2.1 5/8" TYPE X GYP. BD. OVER 1/2" RESILIENT CHANNEL FURRING OVER UNDERSIDE OF FLOOR FRAMING

C2.2 5/8" GYP. BD. OVER SUSPENDED GYP. BD. FRAMING SYSTEM

C2.3 5/8" GYP. BD. OVER 2X WOOD FRAMING

PLAN NOTES:

PN1.1 DEMISING WALL BEHIND KITCHEN CABINETS SHALL BE FURRED OUT WITH 3 1/2" STUDS AND 5/8" GYP. BOARD AT LOCATIONS SHOWN. FURRED WALL SHALL TERMINATE AT EDGE OF UPPER CABINETS

PN1.2 ROOF DRAIN CHASE, RE: PLUMB.

PN1.3 STACKED 30" WIDE X 36" DEEP X 42" TALL TENANT STORAGE LOCKERS, TOTAL OF 20 LOCKERS

PN1.4 TRASH DUMPSTERS

PN1.5 36" X 36" MOP SINK

PN1.6 SEATING BENCH AS PER DET. X/XX

PN1.7 MONUMENT MAILBOX

PN1.8 BIKE RACK, TOTAL CAPACITY, 12 BIKES

PN1.9 PLUMBING/ MECH. CHASE

PN1.10 ELEC. FIREPLACE

PN1.11 HOLE-LESS HYDRAULIC ELEVATOR, OTIS 2500 SERIES, OR EQUAL

PN1.12 2 1/2" "ECO-MAX" RUBBER ROOF TILES AT EXTERIOR PATIO

PN2.1 30" DEEP P. LAM. COUNTERTOP WITH CABINETS BELOW, RE: INTERIOR ELEVATIONS

PN2.2 P. LAM COUNTERTOP

HGF ARCHITECTS INC.

STATE OF COLORADO
AMY G. HURTIG-SMITH
400418
LICENSED ARCHITECT

Lazarus Designs
719.360.3164
ron@lazarusdesignsllc.com
lazarusdesigns.blogspot.com

PROJECT NUMBER:	2019.90
PHASE:	PERMIT SET
PHASE ISSUE DATE:	4-27-20
DESIGNED BY:	RBP/AHS
SCALE:	As indicated

2ND FLOOR PLAN

SHEET ISSUE DATE: 04/27/20

A2.2

THE RIGHT PLACE
CARDINAL CAPITAL MGMT.
A SUPPORTIVE HOUSING FACILITY

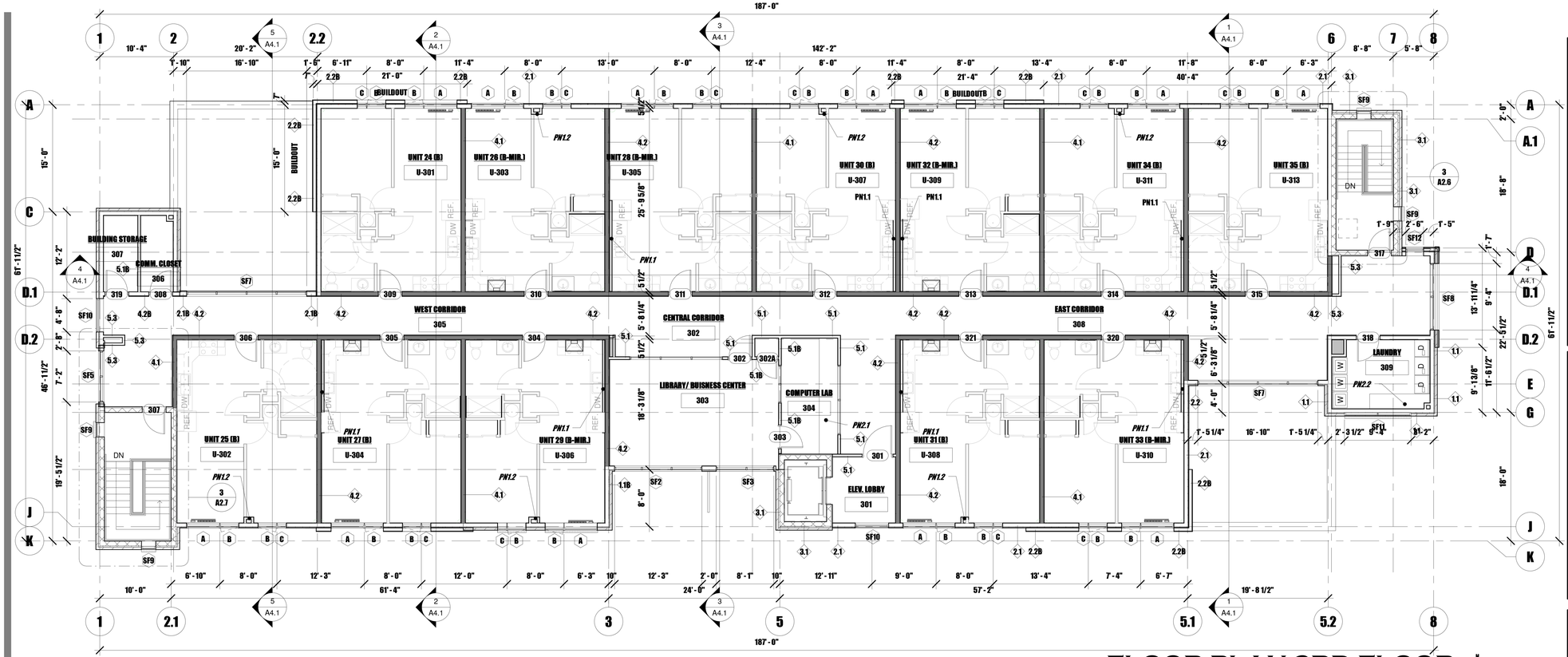

1 FLOOR PLAN-3RD FLOOR

1/8" = 1'-0"

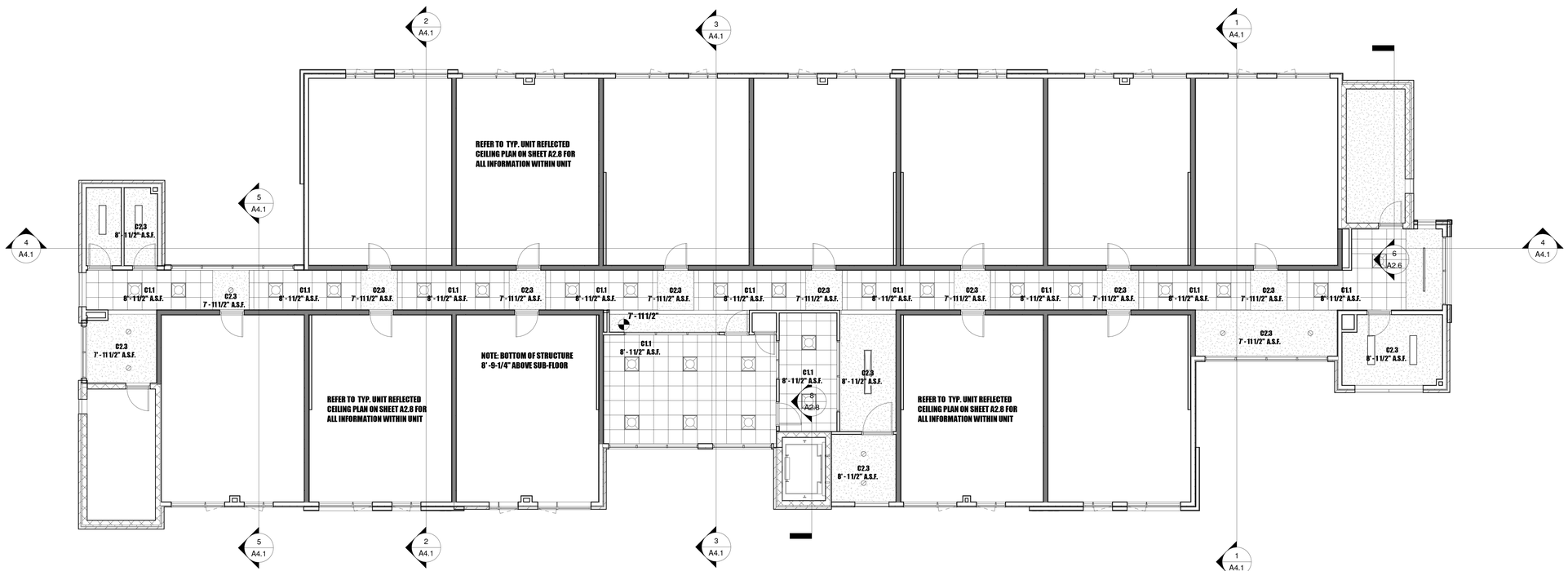

2 REFLECTED CEILING PLAN-3RD FLOOR

1/8" = 1'-0"

GENERAL NOTES:

1. CODES: CONTRACTOR/ BUILDER SHALL COMPLY WITH ALL APPLICABLE CODES AND REGULATIONS OF AUTHORITIES HAVING JURISDICTION, AND USE BEST PRACTICES AND CONSTRUCTION INDUSTRY STANDARDS.

2. INTENT: THE INTENT OF DRAWINGS AND SPECIFICATIONS ARE INTENDED TO PROVIDE THE BASIS FOR PROPER COMPLETION OF THE WORK SUITABLE FOR THE INTENDED USE OF THE OWNER. ANYTHING NOT EXPRESSLY SET FORTH BUT WHICH IS REASONABLY IMPLIED OR NECESSARY FOR PROPER PERFORMANCE/ CONSTRUCTION OF THE PROJECT SHALL BE INCLUDED.

3. EXISTING CONDITIONS: NOTIFY DESIGNER PRIOR TO CONSTRUCTION OF EXISTING SITE CONDITIONS DIFFERING FROM THOSE INDICATED OR IMPLIED ON THE DRAWINGS. SITE CONDITIONS ARE APPROXIMATE AND CONTRACTOR/ BUILDER SHALL VERIFY ALL PROPERTY LINES, EASEMENTS, SETBACKS, ETC. PRIOR TO ANY AND ALL CONSTRUCTION.

4. DIMENSIONS: UNLESS OTHERWISE NOTED, ALL DIMENSIONS ARE TO FACE OF STUD OR GRID LINES. GRID LINES ARE FACE OF STUD/ FACE OF CONC. FOUNDATION AT EXTERIOR WALLS.

5. UNIT LAYOUT: REFER TO UNIT LAYOUT PLAN/ A2.4 FOR DEMISING WALL LAYOUT AND REFER TO UNIT FLOOR PLANS/A2.9 FOR ALL INFORMATION REGARDING TYPICAL UNIT LAYOUT.

WALL TYPES:

REFER TO A2.4 FOR ADDITIONAL DETAIL AND INFORMATION REGARDING WALL TYPES.

W1.1 BRICK VENEER OVER TYPICAL EXTERIOR 2X6 WALL CONSTRUCTION

W2.1 STUCCO SYSTEM OVER TYPICAL EXTERIOR 2X 6 WALL CONSTRUCTION

W2.2 BOXED RIB METAL SIDING OVER TYPICAL EXTERIOR 2X6 WALL CONSTRUCTION

W3.1 BRICK VENEER OVER 8" CMU WALL

W3.2 GYP. BOARD/ FURRING OVER 8" CMU WALL

P4.1 ONE HOUR RATED WALL-TWO LAYERS GYP. BD. OVER 2X6 WOOD STUD FRAMING W/ GYP. BD. OVER 1/2" RESILIENT CHANNEL ON OTHER SIDE

P4.2 SHEAR WALL, SAME AS P4.1, ONLY 1/2" PLYWOOD OVER STUDS, WITH 5/8" GYP. BD. OVER 1/2" RES. CHANNEL ON EAST SIDE

FLOOR TYPES:

REFER TO CROSS SECTIONS AND DETAIL FOR ADDITIONAL INFORMATION.

F1.1 4" CONC. SLAB

F2.1 TYPICAL FLOOR CONSTRUCTION FOR 2ND AND 3RD FLOORS: 1 1/2" GYPCRETE TOPPING SLAB OVER ACOUSTICAL MAT OVER 3/4" PLYWOOD SHEATHING OVER PRE-MANUFACTURED WOOD FLOOR TRUSSES WITH 5/8" TYPE X GYP. BD. OVER 1/2" RESILIENT CHANNEL OVER UNDERSIDE OF FRAMING. 1 HOUR RATED FLOOR ASSEMBLY REQUIRED. UL DES. L528

CEILING TYPES:

REFER TO CROSS SECTIONS AND DETAILS FOR ADDITIONAL INFORMATION.

C1.1 2X2 EXPOSED GRID CEILING SUSPENDED BELOW 5/8" TYPE X GYP. BD. OVER FRAMING

C1.2 2X2 EXPOSED GRID CEILING SUSPENDED FROM STRUCTURE

C2.1 5/8" TYPE X GYP. BD. OVER 1/2" RESILIENT CHANNEL FURRING OVER UNDERSIDE OF FLOOR FRAMING

C2.2 5/8" GYP. BD. OVER SUSPENDED GYP. BD. FRAMING SYSTEM

C2.3 5/8" GYP. BD. OVER 2X WOOD FRAMING. NOTE CEILING OCCURS MIN. 6" BELOW 1 HOUR FLOOR/ CEILING ASSEMBLY, TYP.

PLAN NOTES:

PN1.1 DEMISING WALL BEHIND KITCHEN CABINETS SHALL BE FURRED OUT WITH 3 1/2" STUDS AND 5/8" GYP. BOARD AT LOCATIONS SHOWN. FURRED WALL SHALL TERMINATE AT EDGE OF UPPER CABINETS

PN1.2 ROOF DRAIN CHASE, RE: PLUMB.

PN1.3 STACKED 20" WIDE X 16" DEEP X 42" TALL TENANT STORAGE LOCKERS, TOTAL OF 20 LOCKERS

PN1.4 TRASH DUMPSTERS

PN1.5 36" X 36" MOP SINK

PN1.6 SEATING BENCH AS PER DET. X/XX

PN1.7 MONUMENT MAILBOX

PN1.8 BIKE RACK, TOTAL CAPACITY, 12 BIKES

PN1.9 PLUMBING/ MECH. CHASE

PN1.10 ELEC. FIREPLACE

PN1.11 HOLE-LESS HYDRAULIC ELEVATOR, OTIS 2500 SERIES, OR EQUAL

PN2.1 30" DEEP P. LAM. COUNTERTOP WITH CABINETS BELOW, RE: INTERIOR ELEVATIONS

PN2.2 P. LAM COUNTERTOP

HGF ARCHITECTS INC.

STATE OF COLORADO
AMY G. HURTIG-SMITH
400418
LICENSED ARCHITECT

Lazarus Designs
719.360.5164
ron@lazarusdesignsllc.com
lazarusdesigns.blogspot.com

PROJECT NUMBER:	2019.90
PHASE:	PERMIT SET
PHASE ISSUE DATE:	4-27-20
DESIGNED BY:	RBP/AHS
SCALE:	As indicated

THIRD FLOOR PLAN

SHEET ISSUE DATE: 04/27/20

A2.3

THE RIGHT PLACE
CARDINAL CAPITAL MGMT.
A SUPPORTIVE HOUSING FACILITY

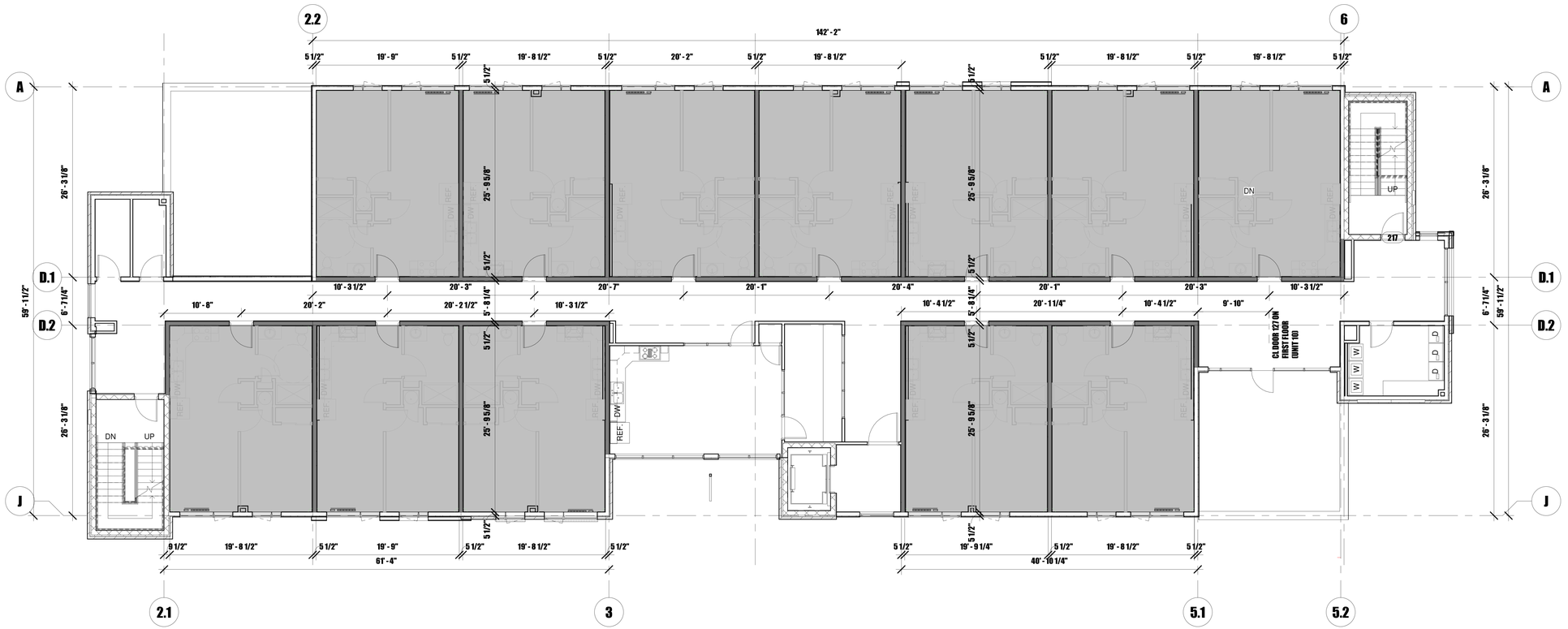

1 UNIT LAYOUT
1/8" = 1'-0"

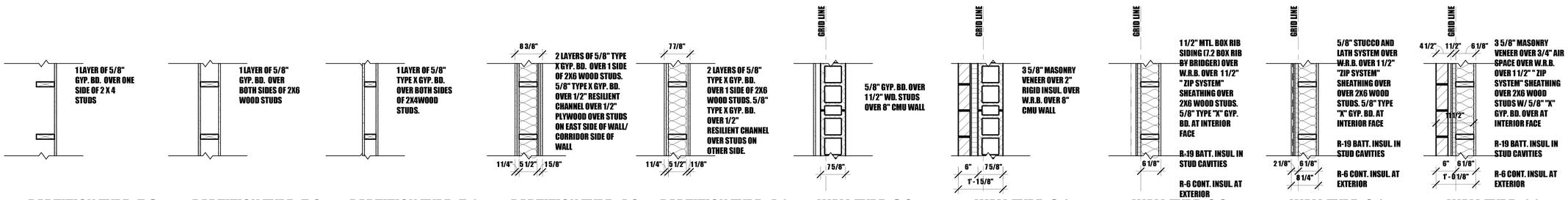

PARTITION TYPE -5.3
FIRE RATING: NOT RATED

PARTITION TYPE -5.2
FIRE RATING: NOT RATED

PARTITION TYPE -5.1
UL-DES: U305
FIRE RATING: 1 HOUR
STC VALUE: 32

PARTITION TYPE -4.2
UL-DES U327 (SIMILIAR)
FIRE RATING: 1 HOUR
STC: 51

PARTITION TYPE -4.1
UL-DES 327 (RAL-TL11-174)
FIRE RATING: 1 HOUR
STC: 51

WALL TYPE -3.2
FIRE RATING: 1 HOUR

WALL TYPE -3.1
FIRE RATING: 1 HOUR
R- VALUE: R-25

WALL TYPE -2.2
FIRE RATING: 1 HOUR UL DES U330
R- VALUE: R-25

WALL TYPE -2.1
FIRE RATING: 1 HOUR UL DES U330
R- VALUE: R-25

WALL TYPE -1.1
FIRE RATING: 1 HOUR UL DES U330
R- VALUE: R-25

PARTITION TYPE -6.1
FIRE RATING: NOT REQ'D

PARTITION TYPE -5.2B
UL-DES: U305
FIRE RATING: 1 HOUR
STC VALUE: 32

PARTITION TYPE -5.1B
FIRE RATING: NOT REQ'D

PARTITION TYPE -4.2B
UL-DES U327 (SIMILIAR)
FIRE RATING: 1 HOUR

WALL TYPE -2.2B
FIRE RATING: 1 HOUR UL DES U330
R- VALUE: R-25

WALL TYPE -2.1B
FIRE RATING: 1 HOUR UL DES U330
R- VALUE: R-25

WALL TYPE -1.1A
FIRE RATING: 1 HOUR UL DES U330
R- VALUE: R-25

2 WALL TYPES
3/4" = 1'-0"

HGF ARCHITECTS INC.

STATE OF COLORADO
AMY G. HURTIG-SMITH
400418
LICENSED ARCHITECT

Lazarus Designs
719.360.3164
ron@lazarusdesignsllc.com
lazarusdesigns.blogspot.com

A SUPPORTIVE HOUSING FACILITY

THE RIGHT PLACE
CARDINAL CAPITAL MGMT.

PROJECT NUMBER:	2019.90
PHASE:	PERMIT SET
PHASE ISSUE DATE:	4-27-20
DESIGNED BY:	RBP/AHS
SCALE:	As indicated

WALL TYPES/ UNIT LAYOUT

SHEET ISSUE DATE: 04/27/20

A2.4

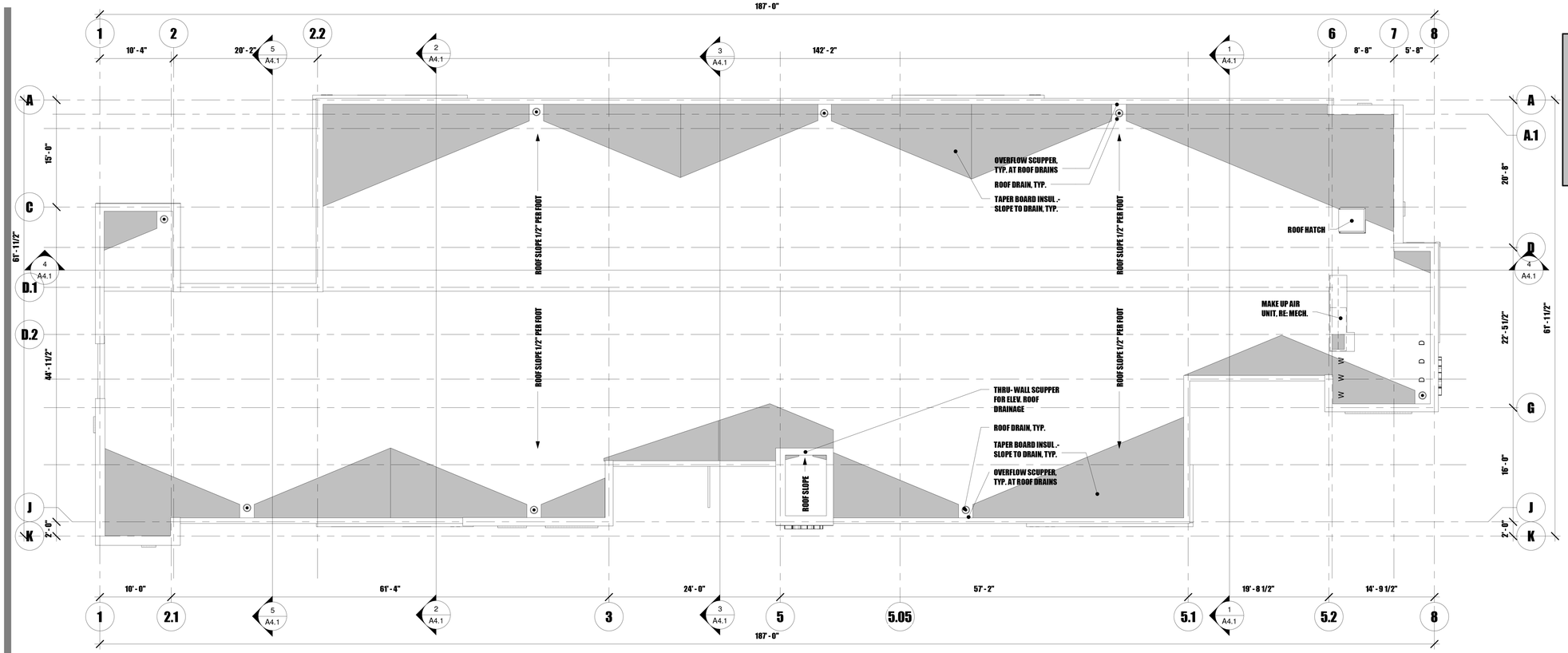

1 ROOF PLAN
1/8" = 1'-0"

ROOF TYPES:

REFER TO CROSS SECTIONS AND DETAILS FOR ADDITIONAL INFORMATION.

R 1 T.P.O. MEMBRANE ROOFING OVER 1/2" COVER BOARD OVER R-38 RIGID INSUL. (APPROX. 8") OVER 5/8" PLYWOOD ROOF SHEATHING OVER STRUCTURE

HGF ARCHITECTS INC.

STATE OF COLORADO
AMY G. HURTIG-SMITH
400418
LICENSED ARCHITECT

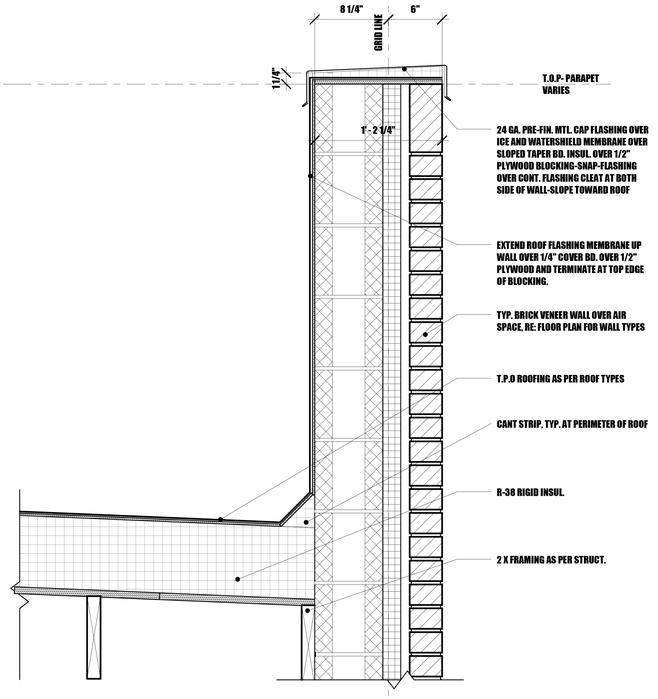

4 ROOF DETAIL 3
1 1/2" = 1'-0"

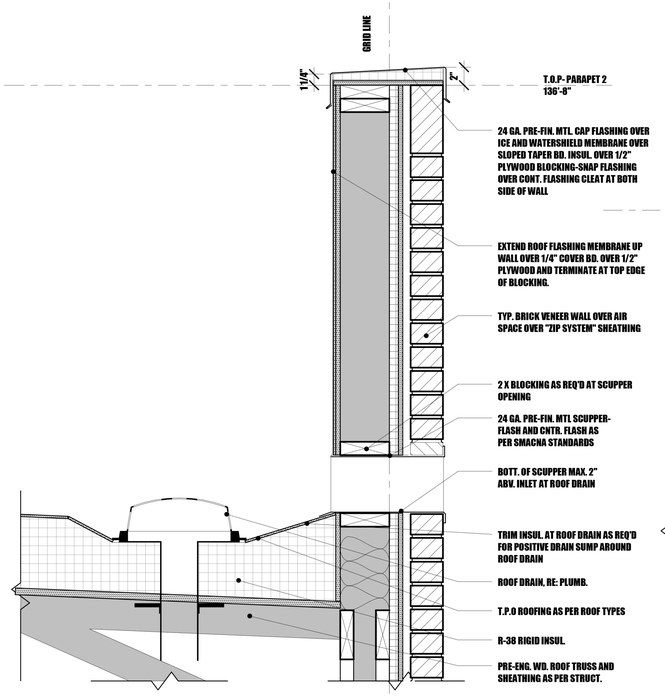

3 ROOF DETAIL 2
1 1/2" = 1'-0"

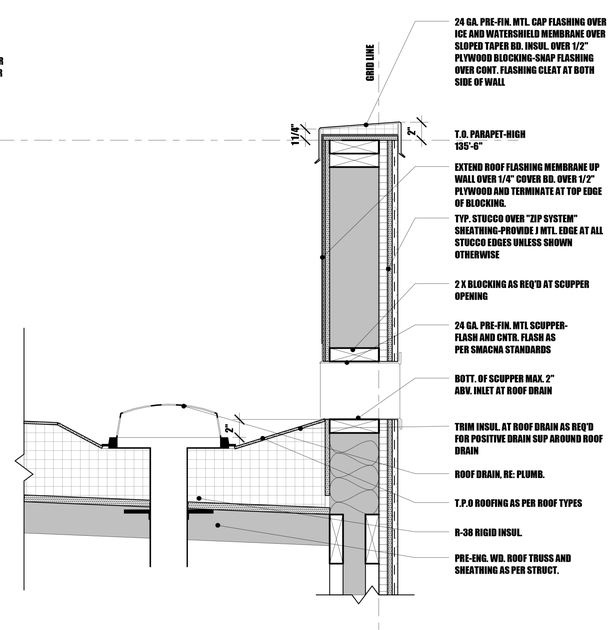

2 ROOF DETAIL 1
1 1/2" = 1'-0"

Lazarus Designs
719.360.3164
ron@lazarusdesignsllc.com
lazarusdesigns.blogspot.com

PROJECT NUMBER:	2019.90
PHASE:	PERMIT SET
PHASE ISSUE DATE:	4-27-20
DESIGNED BY:	RBP/AHS
SCALE:	As indicated

ROOF PLAN/ ROOF DETAILS

SHEET ISSUE DATE: 04/27/20

A2.5

THE RIGHT PLACE
CARDINAL CAPITAL MGMT.
A SUPPORTIVE HOUSING FACILITY

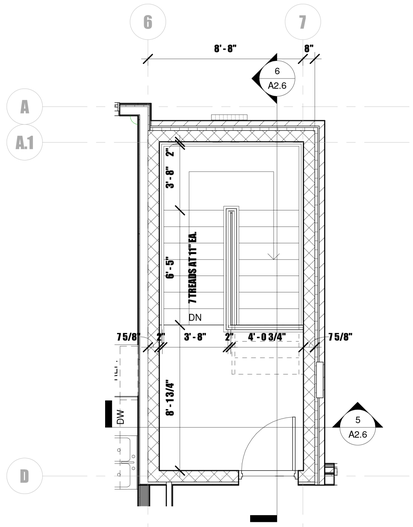

3 STAIR 1-3RD FLOOR

1/4" = 1'-0"

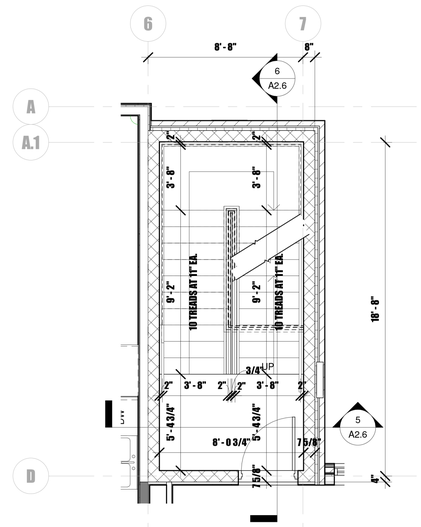

2 STAIR 1-2ND FLOOR

1/4" = 1'-0"

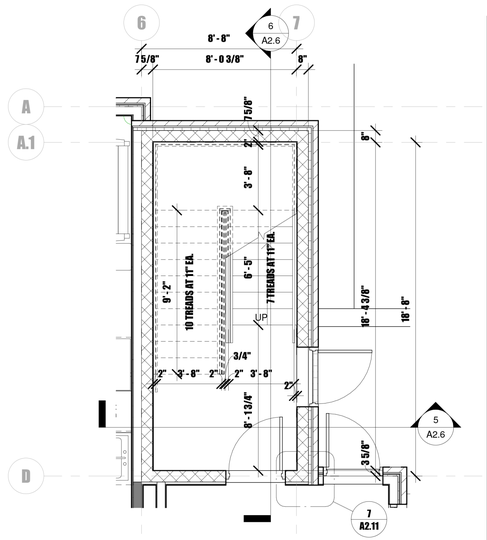

1 STAIR 1-1ST FLOOR

1/4" = 1'-0"

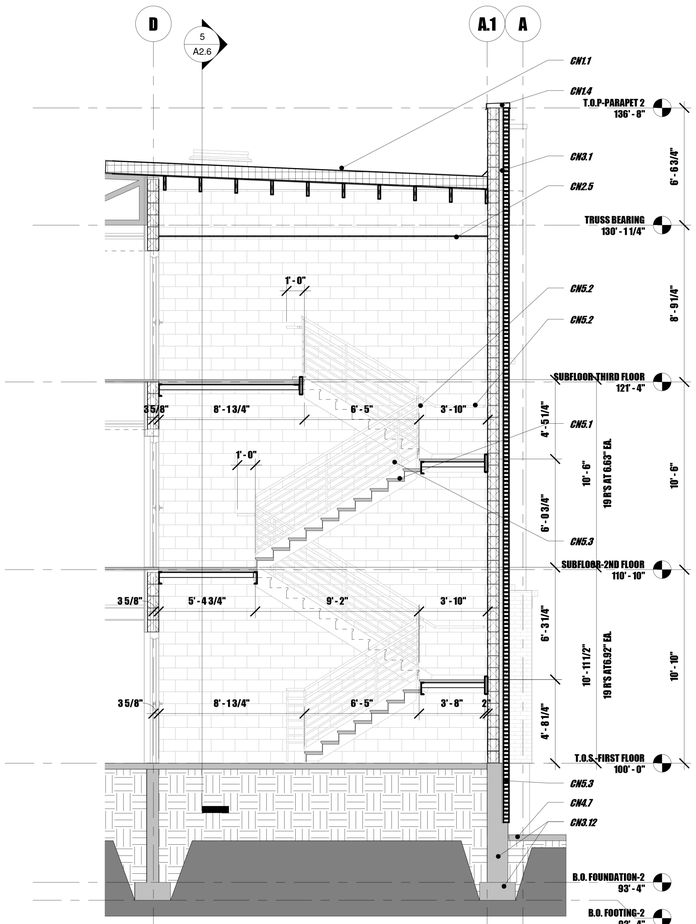

6 STAIR 1-SECTION 1

1/4" = 1'-0"

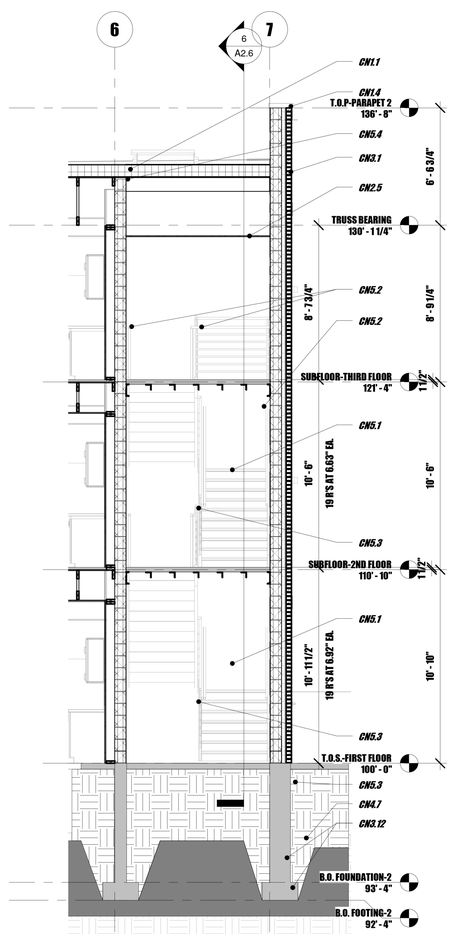

5 STAIR 1-SECTION 2

1/4" = 1'-0"

CONSTRUCTION NOTES:

CN1.1 RE: ROOF PLANS FOR ROOF TYPE

CN1.2 LINE OF ROOF BEHIND PARAPET SHOWN DASHED

CN1.3 PRE-MANUFACTURED WOOD ROOF TRUSSES, WEB CONFIGURATION AND TRUSS DESIGN BY TRUSS MNFR. RE: STRUCTURAL

CN1.4 24 GA. PRE-FINISHED MTL. CAP FLASHING

CN1.5 4" X 16", 24 GA. PRE-FINISHED MTL. OVERFLOW SCUPPER. RE:

CN1.6 TAPER BOARD INSUL.

CN1.7 ROOF DRAIN, RE: PLUMB.

CN1.8 PRE-MANUF. CONC. WALL CAP

CN1.9 SLOPING LVL ROOF JOISTS WITH TOP OF JOIST FLUSH WITH TOP OF TRUSS, RE: STRUCT.

CN1.10 ROOF TOP PEDESTAL PAVING OVER WATERPROOF MEMBRANE

CN1.11 CANT STRIP, TYP. AT ALL PARAPETS

CN1.12 TRUSS BLOCKING AS PER TRUSS MNFR. AND STRUCT.

CN1.13 ENTRY CANOPY ROOF SHALL BE: TPO ROOFING OVER PLYWOOD DECKING OVER STL. TUBE FRAMING W/ TYP. STUCCO OVER 7/8" HAT CHANNELS AT UNDERSIDE

CN2.1 FLOOR TYPE FT.1: TYPICAL FLOOR CONSTRUCTION SHALL BE GYPCRETE OVER WOOD FLOOR TRUSSES, RE: FLOOR TYPES FOR ADDIT. INFO

CN2.2 5/8" GYP. BOARD OVER RESILIENT CHANNEL

CN2.3 5/8" GYP. BD. OVER FRAMING, RE: REF. CEILING PLAN

CN2.4 SUSPENDED GRID CEILING, RE: REF. CEILING PLAN

CN2.5 SUSPENDED GYP. BD. CEILING, RE: REF. CEILING PLAN

CN2.6 RE: STRUCTURAL FOR TYP. HEADER, NOTE: PROVIDE 1" RIGID INSUL. SPACER AS SHOWN IN 2X HEADERS

CN2.7 4" CONC. SLAB OVER COMPACTED SUB GRADE

CN2.8 APPROX. LINE OF EXIST. GRADE, RE: CIVIL

CN2.9 WOOD FLOOR TRUSSES AND PERIMETER BLOCKING AS PER TRUSS MNFR. AND STRUCT.

CN2.10 TYP. STUCCO AT UNDERSIDE FRAMING

CN3.1 BRICK VENEER WALL, RE: FLOOR PLAN FOR WALL TYPES

CN3.2 STUCCO SYSTEM OVER TYP. 2 X 6 WOOD FRAMING, RE: FLOOR PLAN FOR WALL TYPES

CN3.3 3/4" ALUM. REVEAL JOINT IN STUCCO

CN3.4 BOX RIBBED MTL SIDING SYSTEM OVER 2 X 6 WOOD FRAMING, RE: FLOOR PLAN FOR WALL TYPES

CN3.5 COMPOSITE FRAME WINDOWS IN RESIDENTIAL UNITS ONLY, RE: FLOOR PLAN FOR WINDOW TYPES

CN3.6 ANOD. ALUM. STOREFRONT FRAMING RE: FLOOR PLAN FOR WINDOW TYPES

CN3.7 H.M. DOOR/ WINDOW, RE: FLOOR PLAN FOR DOOR NUMBERS/ WINDOW TYPES

CN3.8 ANOD. ALUM. WINDOW GLAZING, RE: FLOOR PLAN FOR WINDOW TYPES

CN3.9 LINE OF RESIDENTIAL UNIT DEMISING WALLS SHOWN DASHED AND SHADED

CN3.10 BRICK SOLDIER COURSE, TYP. OVER ALL MAS. OPENINGS/ CONTINUOUS WHERE SHADED

CN3.11 BOX RIBBED MTL. SIDING BUILDOUT, RE: X/XX FOR DETAILS

CN3.12 CONC. FOUNDATION WALL AND FOOTING, RE: STRUCT.

CN3.13 FOUNDATION WALL W/ BRICK LEDGE, RE: STRUCT.

CN3.14 BLOCKING AS REQUIRED AT TOP OF ALL WALL AT UNDERSIDE OF STRUCTURE

CN3.15 BRICK ROWLOCK AT TOP OF MASONRY AND AT SILLS OF MASONRY OPENING

CN4.3 BUILDING SIGNAGE

CN4.7 CONC. APRON OR SIDEWALK, SLOPE AWAY FROM BUILDING. RE: CIVIL

CN4.9 1/4" EXP. MAT. AT PERIMETER OF ALL CONC. SLABS/ WALL JOINT

CN4.10 2" RIGID INSUL. WHERE SHOWN

CN4.11 STEEL BEAM AS PER STRUCT.

CN4.12 9 1/4" LVL JOIST/ BEAM AS PER STRUCT.

CN5.1 STL. PAN STAIR CONSTRUCTION W/ 2" X12 STL. TUBE STRINGERS, 3" CONC. TOPPING OVER STL. ANGLE STIFFENED PAN. RE: STRUCTURAL FOR SIZES

CN5.2 CONTINUOUS HANDRAILS AT 35" ABV. TREAD AT NOSING, BOTH SIDES OF STAIR, TERMINATE AS SHOWN

CN5.3 GUARDRAIL W/ TOP RAIL AT 42" ABOVE TREAD AT NOSING

CN5.4 SEAL MASONRY TO UNDERSIDE OF ROOF SHEATHING

HGF ARCHITECTS INC.

STATE OF COLORADO
AMY G. HURTIG-SMITH
400418
LICENSED ARCHITECT

Lazarus Designs
719.360.3164
ron@lazarusdesignsllc.com
lazarusdesigns.blogspot.com

PROJECT NUMBER:	2019.90
PHASE:	PERMIT SET
PHASE ISSUE DATE:	4-27-20
DESIGNED BY:	RBP/AHS
SCALE:	As indicated

ENLARGED PLANS

SHEET ISSUE DATE: 04/27/20

A2.6

THE RIGHT PLACE
CARDINAL CAPITAL MGMT.
A SUPPORTIVE HOUSING FACILITY

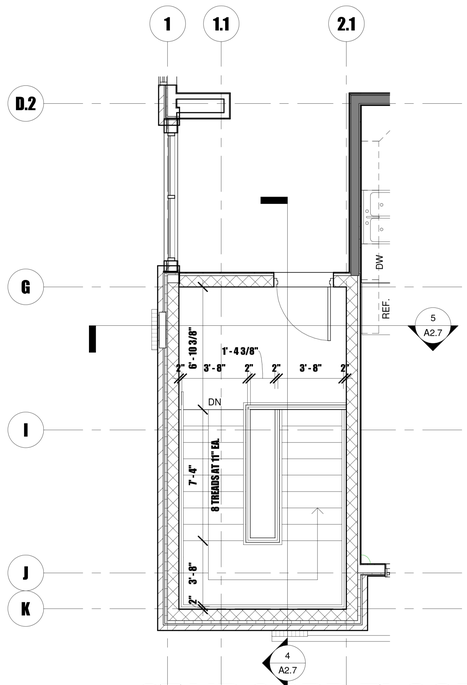

3 STAIR 2-3RD FLOOR

1/4" = 1'-0"

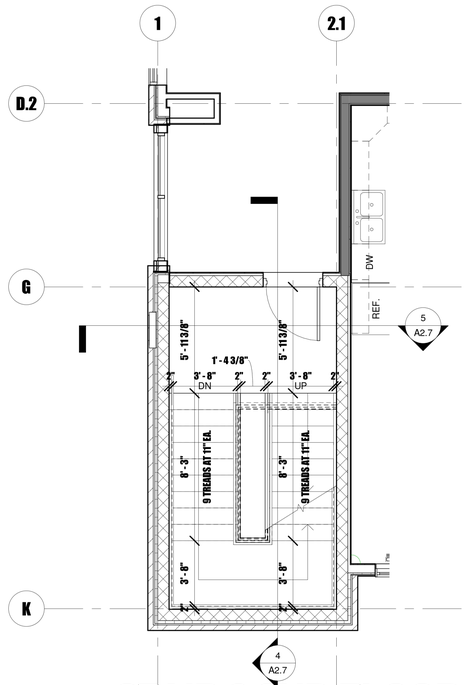

2 STAIR 2-2ND FLOOR

1/4" = 1'-0"

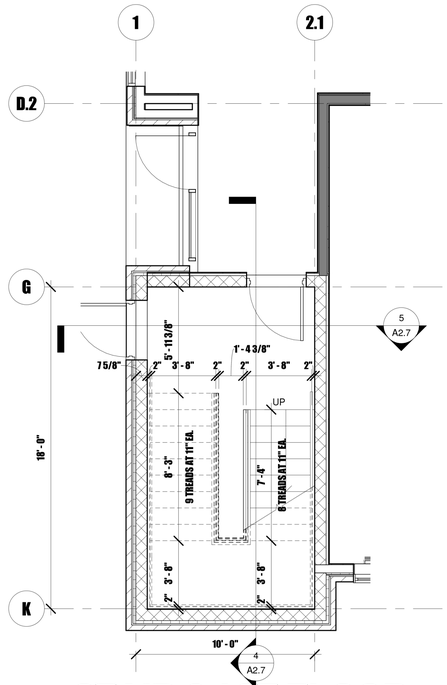

1 STAIR 2-1ST FLOOR

1/4" = 1'-0"

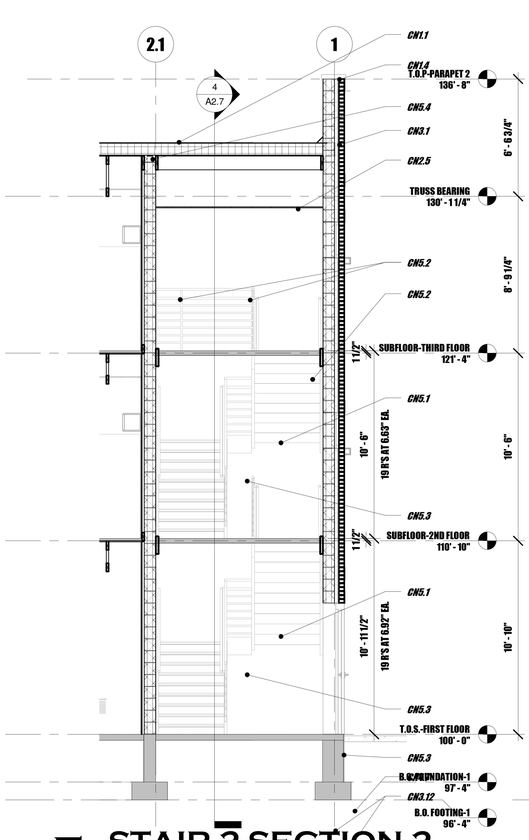

5 STAIR 2-SECTION 2

1/4" = 1'-0"

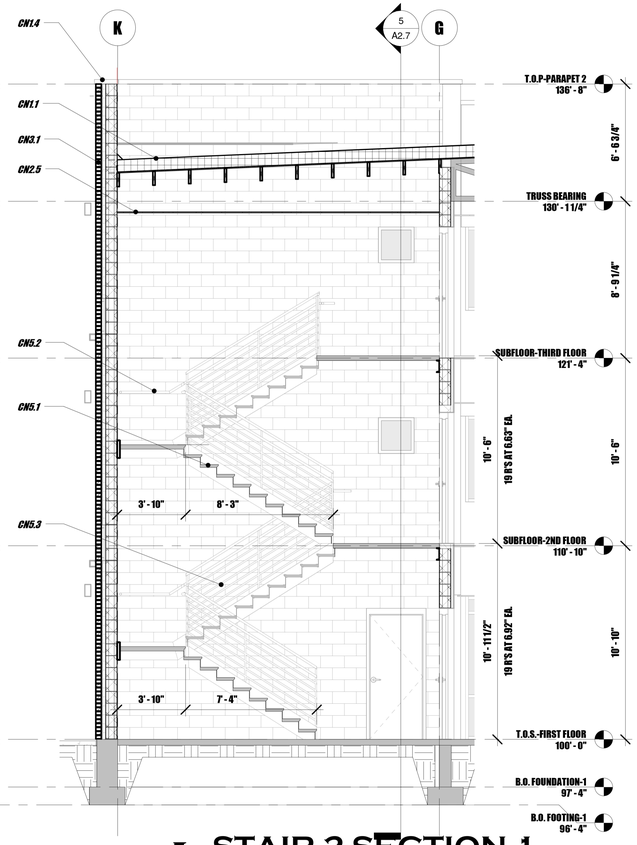

4 STAIR 2-SECTION 1

1/4" = 1'-0"

CONSTRUCTION NOTES:

CN1.1 RE: ROOF PLANS FOR ROOF TYPE

CN1.2 LINE OF ROOF BEHIND PARAPET SHOWN DASHED

CN1.3 PRE-MANUFACTURED WOOD ROOF TRUSSES, WEB CONFIGURATION AND TRUSS DESIGN BY TRUSS MNFR. RE: STRUCTURAL

CN1.4 24 GA. PRE-FINISHED MTL. CAP FLASHING

CN1.5 4" X 16", 24 GA. PRE-FINISHED MTL. OVERFLOW SCUPPER. RE:

CN1.6 TAPER BOARD INSUL.

CN1.7 ROOF DRAIN, RE: PLUMB.

CN1.8 PRE-MANUF. CONC. WALL CAP

CN1.9 SLOPING LVL ROOF JOISTS WITH TOP OF JOIST FLUSH WITH TOP OF TRUSS, RE: STRUCT.

CN1.10 ROOF TOP PEDESTAL PAVING OVER WATERPROOF MEMBRANE

CN1.11 CANT STRIP, TYP. AT ALL PARAPETS

CN1.12 TRUSS BLOCKING AS PER TRUSS MNFR. AND STRUCT.

CN1.13 ENTRY CANOPY ROOF SHALL BE: TPO ROOFING OVER PLYWOOD DECKING OVER STL. TUBE FRAMING W/ TYP. STUCCO OVER 7/8" HAT CHANNELS AT UNDERSIDE

CN2.1 FLOOR TYPE FT.1: TYPICAL FLOOR CONSTRUCTION SHALL BE GYPCRETE OVER WOOD FLOOR TRUSSES, RE: FLOOR TYPES FOR ADDIT. INFO

CN2.2 5/8" GYP. BOARD OVER RESILIENT CHANNEL

CN2.3 5/8" GYP. BD. OVER FRAMING, RE: REF. CEILING PLAN

CN2.4 SUSPENDED GRID CEILING, RE: REF. CEILING PLAN

CN2.5 SUSPENDED GYP. BD. CEILING, RE: REF. CEILING PLAN

CN2.6 RE: STRUCTURAL FOR TYP. HEADER, NOTE: PROVIDE 1" RIGID INSUL. SPACER AS SHOWN IN 2X HEADERS

CN2.7 4" CONC. SLAB OVER COMPACTED SUB GRADE

CN2.8 APPROX. LINE OF EXIST. GRADE, RE: CIVIL

CN2.9 WOOD FLOOR TRUSSES AND PERIMETER BLOCKING AS PER TRUSS MNFR. AND STRUCT.

CN2.10 TYP. STUCCO AT UNDERSIDE FRAMING

CN3.1 BRICK VENEER WALL, RE: FLOOR PLAN FOR WALL TYPES

CN3.2 STUCCO SYSTEM OVER TYP. 2 X 6 WOOD FRAMING, RE: FLOOR PLAN FOR WALL TYPES

CN3.3 3/4" ALUM. REVEAL JOINT IN STUCCO

CN3.4 BOX RIBBED MTL SIDING SYSTEM OVER 2 X 6 WOOD FRAMING, RE: FLOOR PLAN FOR WALL TYPES

CN3.5 COMPOSITE FRAME WINDOWS IN RESIDENTIAL UNITS ONLY, RE: FLOOR PLAN FOR WINDOW TYPES

CN3.6 ANOD. ALUM. STOREFRONT FRAMING RE: FLOOR PLAN FOR WINDOW TYPES

CN3.7 H.M. DOOR/ WINDOW, RE: FLOOR PLAN FOR DOOR NUMBERS/ WINDOW TYPES

CN3.8 ANOD. ALUM. WINDOW GLAZING, RE: FLOOR PLAN FOR WINDOW TYPES

CN3.9 LINE OF RESIDENTIAL UNIT DEMISING WALLS SHOWN DASHED AND SHADED

CN3.10 BRICK SOLDIER COURSE, TYP. OVER ALL MAS. OPENINGS/ CONTINOUS WHERE SHADED

CN3.11 BOX RIBBED MTL. SIDING BUILDOUT, RE: X/XX FOR DETAILS

CN3.12 CONC. FOUNDATION WALL AND FOOTING, RE: STRUCT.

CN3.13 FOUNDATION WALL W/ BRICK LEDGE, RE: STRUCT.

CN3.14 BLOCKING AS REQUIRED AT TOP OF ALL WALL AT UNDERSIDE OF STRUCTURE

CN3.15 BRICK ROWLOCK AT TOP OF MASONRY AND AT SILLS OF MASONRY OPENING

CN4.3 BUILDING SIGNAGE

CN4.7 CONC. APRON OR SIDEWALK, SLOPE AWAY FROM BUILDING. RE: CIVIL

CN4.9 1/4" EXP. MAT. AT PERIMETER OF ALL CONC. SLABS/ WALL JOINT

CN4.10 2" RIGID INSUL. WHERE SHOWN

CN4.11 STEEL BEAM AS PER STRUCT.

CN4.12 9 1/4" LVL JOIST/ BEAM AS PER STRUCT.

CN5.1 STL. PAN STAIR CONSTRUCTION W/ 2" X12 STL. TUBE STRINGERS, 3" CONC. TOPPING OVER STL. ANGLE STIFFENED PAN. RE: STRUCTURAL FOR SIZES

CN5.2 CONTINOUS HANDRAILS AT 35" ABV. TREAD AT NOSING, BOTH SIDES OF STAIR, TERMINATE AS SHOWN

CN5.3 GUARDRAIL W/ TOP RAIL AT 42" ABOVE TREAD AT NOSING

CN5.4 SEAL MASONRY TO UNDERSIDE OF ROOF SHEATHING

HGF ARCHITECTS INC.

STATE OF COLORADO
AMY G. HURTIG-SMITH
490418
LICENSED ARCHITECT

Lazarus Designs
719.360.3164
ron@lazarusdesignsllc.com
lazarusdesigns.blogspot.com

PROJECT NUMBER:	2019.90
PHASE:	PERMIT SET
PHASE ISSUE DATE:	4-27-20
DESIGNED BY:	RBP/AHS
SCALE:	As indicated

ENLARGED PLANS

SHEET ISSUE DATE: 04/27/20

A2.7

THE RIGHT PLACE
CARDINAL CAPITAL MGMT.
A SUPPORTIVE HOUSING FACILITY

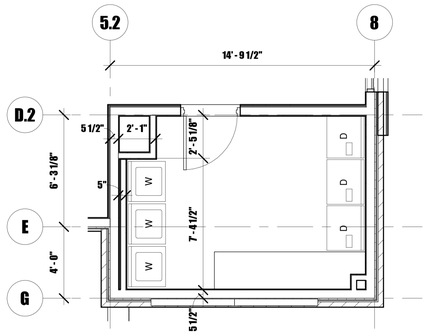

3 LAUNDRY ROOM 209

1/4" = 1'-0"

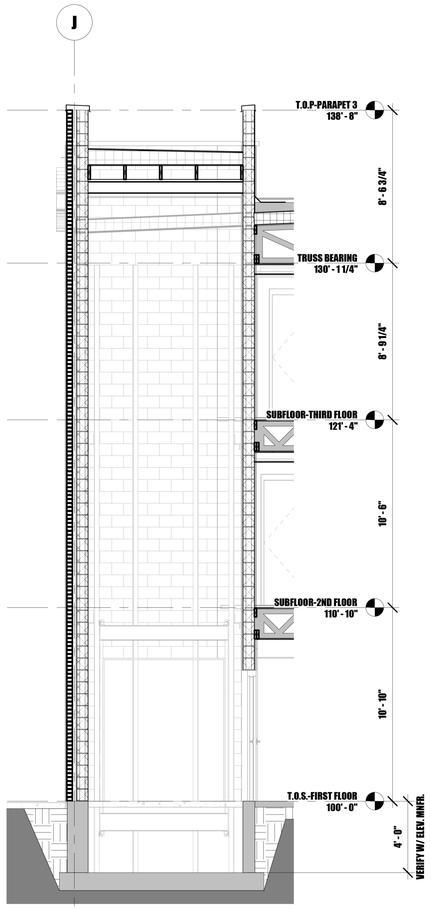

8 ELEVATOR SECTION 1

1/4" = 1'-0"

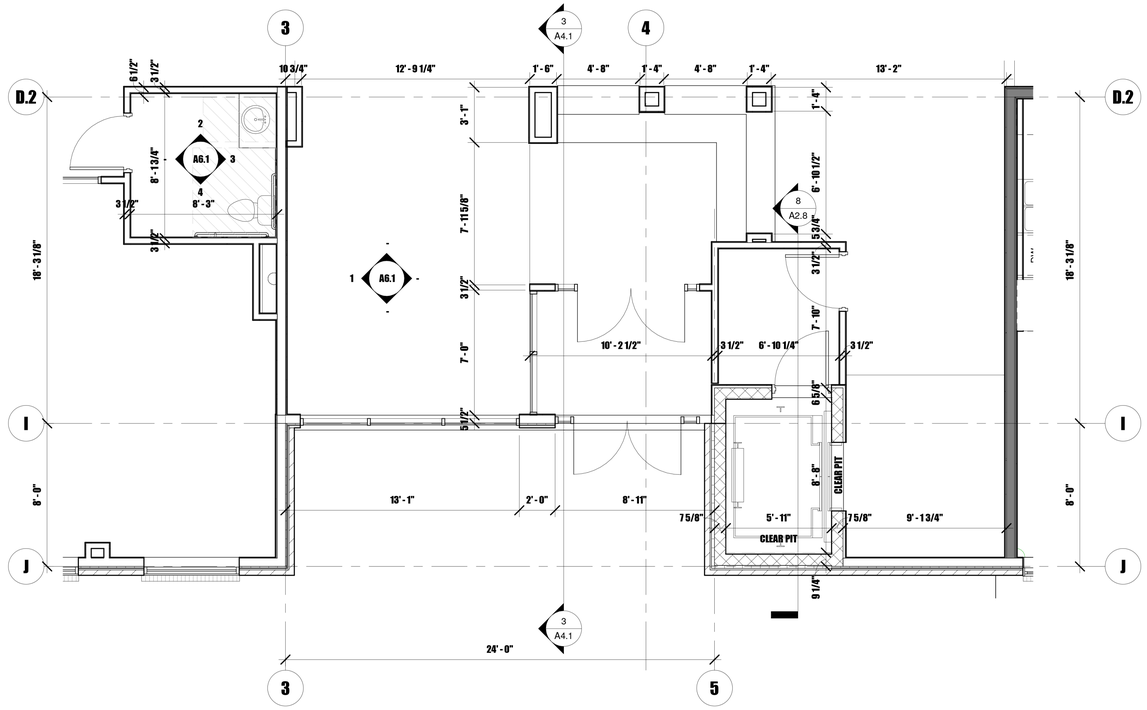

1 ENLARGED PLAN-LOBBY 101

1/4" = 1'-0"

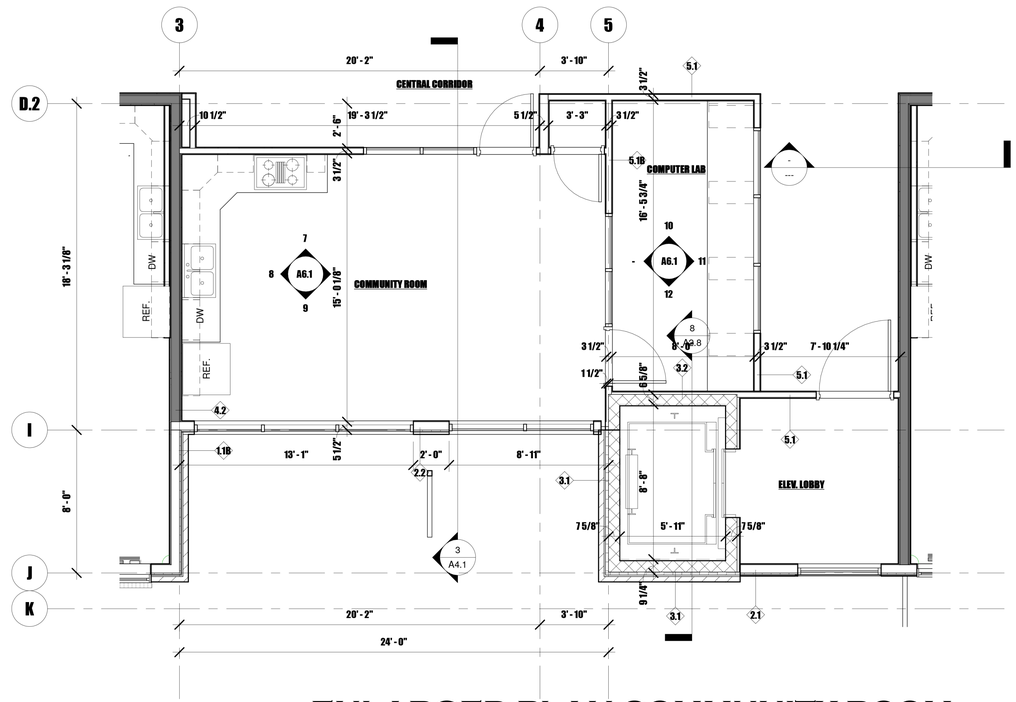

2 ENLARGED PLAN-COMMUNITY ROOM 203

1/4" = 1'-0"

CONSTRUCTION NOTES:

CN1.1 RE: ROOF PLANS FOR ROOF TYPE

CN1.2 LINE OF ROOF BEHIND PARAPET SHOWN DASHED

CN1.3 PRE-MANUFACTURED WOOD ROOF TRUSSES, WEB CONFIGURATION AND TRUSS DESIGN BY TRUSS MNFR. RE: STRUCTURAL

CN1.4 24 GA. PRE-FINISHED MTL. CAP FLASHING

CN1.5 4" X 16", 24 GA. PRE-FINISHED MTL. OVERFLOW SCUPPER. RE:

CN1.6 TAPER BOARD INSUL.

CN1.7 ROOF DRAIN, RE: PLUMB.

CN1.8 PRE-MANUF. CONC. WALL CAP

CN1.9 SLOPING LVL ROOF JOISTS WITH TOP OF JOIST FLUSH WITH TOP OF TRUSS, RE: STRUCT.

CN1.10 ROOF TOP PEDESTAL PAVING OVER WATERPROOF MEMBRANE

CN1.11 CANT STRIP, TYP. AT ALL PARAPETS

CN1.12 TRUSS BLOCKING AS PER TRUSS MNFR. AND STRUCT.

CN1.13 ENTRY CANOPY ROOF SHALL BE: TPO ROOFING OVER PLYWOOD DECKING OVER STL. TUBE FRAMING W/ TYP. STUCCO OVER 7/8" HAT CHANNELS AT UNDERSIDE

CN2.1 FLOOR TYPE FT.1: TYPICAL FLOOR CONSTRUCTION SHALL BE GYPCRETE OVER WOOD FLOOR TRUSSES, RE: FLOOR TYPES FOR ADDIT. INFO

CN2.2 5/8" GYP. BOARD OVER RESILIENT CHANNEL

CN2.3 5/8" GYP. BD. OVER FRAMING, RE: REF. CEILING PLAN

CN2.4 SUSPENDED GRID CEILING, RE: REF. CEILING PLAN

CN2.5 SUSPENDED GYP. BD. CEILING, RE: REF. CEILING PLAN

CN2.6 RE: STRUCTURAL FOR TYP. HEADER, NOTE: PROVIDE 1" RIGID INSUL. SPACER AS SHOWN IN 2X HEADERS

CN2.7 4" CONC. SLAB OVER COMPACTED SUB GRADE

CN2.8 APPROX. LINE OF EXIST. GRADE, RE: CIVIL

CN2.9 WOOD FLOOR TRUSSES AND PERIMETER BLOCKING AS PER TRUSS MNFR. AND STRUCT.

CN2.10 TYP. STUCCO AT UNDERSIDE FRAMING

CN3.1 BRICK VENEER WALL, RE: FLOOR PLAN FOR WALL TYPES

CN3.2 STUCCO SYSTEM OVER TYP. 2 X 6 WOOD FRAMING, RE: FLOOR PLAN FOR WALL TYPES

CN3.3 3/4" ALUM. REVEAL JOINT IN STUCCO

CN3.4 BOX RIBBED MTL SIDING SYSTEM OVER 2 X 6 WOOD FRAMING, RE: FLOOR PLAN FOR WALL TYPES

CN3.5 COMPOSITE FRAME WINDOWS IN RESIDENTIAL UNITS ONLY, RE: FLOOR PLAN FOR WINDOW TYPES

CN3.6 ANOD. ALUM. STOREFRONT FRAMING RE: FLOOR PLAN FOR WINDOW TYPES

CN3.7 H.M. DOOR/ WINDOW, RE: FLOOR PLAN FOR DOOR NUMBERS/ WINDOW TYPES

CN3.8 ANOD. ALUM. WINDOW GLAZING, RE: FLOOR PLAN FOR WINDOW TYPES

CN3.9 LINE OF RESIDENTIAL UNIT DEMISING WALLS SHOWN DASHED AND SHADED

CN3.10 BRICK SOLDIER COURSE, TYP. OVER ALL MAS. OPENINGS/ CONTINUOUS WHERE SHADED

CN3.11 BOX RIBBED MTL. SIDING BUILDOUT, RE: X/XX FOR DETAILS

CN3.12 CONC. FOUNDATION WALL AND FOOTING, RE: STRUCT.

CN3.13 FOUNDATION WALL W/ BRICK LEDGE, RE: STRUCT.

CN3.14 BLOCKING AS REQUIRED AT TOP OF ALL WALL AT UNDERSIDE OF STRUCTURE

CN3.15 BRICK ROWLOCK AT TOP OF MASONRY AND AT SILLS OF MASONRY OPENING

CN4.3 BUILDING SIGNAGE

CN4.7 CONC. APRON OR SIDEWALK, SLOPE AWAY FROM BUILDING. RE: CIVIL

CN4.9 1/4" EXP. MAT. AT PERIMETER OF ALL CONC. SLABS/ WALL JOINT

CN4.10 2" RIGID INSUL. WHERE SHOWN

CN4.11 STEEL BEAM AS PER STRUCT.

CN4.12 9 1/4" LVL JOIST/ BEAM AS PER STRUCT.

CN5.1 STL. PAN STAIR CONSTRUCTION W/ 2" X12 STL. TUBE STRINGERS, 3" CONC. TOPPING OVER STL. ANGLE STIFFENED PAN. RE: STRUCTURAL FOR SIZES

CN5.2 CONTINUOUS HANDRAILS AT 35" ABV. TREAD AT NOSING, BOTH SIDES OF STAIR, TERMINATE AS SHOWN

CN5.3 GUARDRAIL W/ TOP RAIL AT 42" ABOVE TREAD AT NOSING

HGF ARCHITECTS INC.

STATE OF COLORADO
AMY G. HURTIG-SMITH
400418
LICENSED ARCHITECT

Lazarus Designs
719.360.3164
ron@lazarusdesignsllc.com
lazarusdesigns.blogspot.com

A SUPPORTIVE HOUSING FACILITY

THE RIGHT PLACE
CARDINAL CAPITAL MGMT.

PROJECT NUMBER:	2019.90
PHASE:	PERMIT SET
PHASE ISSUE DATE:	4-27-20
DESIGNED BY:	RBP/AHS
SCALE:	As indicated

ENLARGED PLANS

SHEET ISSUE DATE: 04/27/20

A2.8

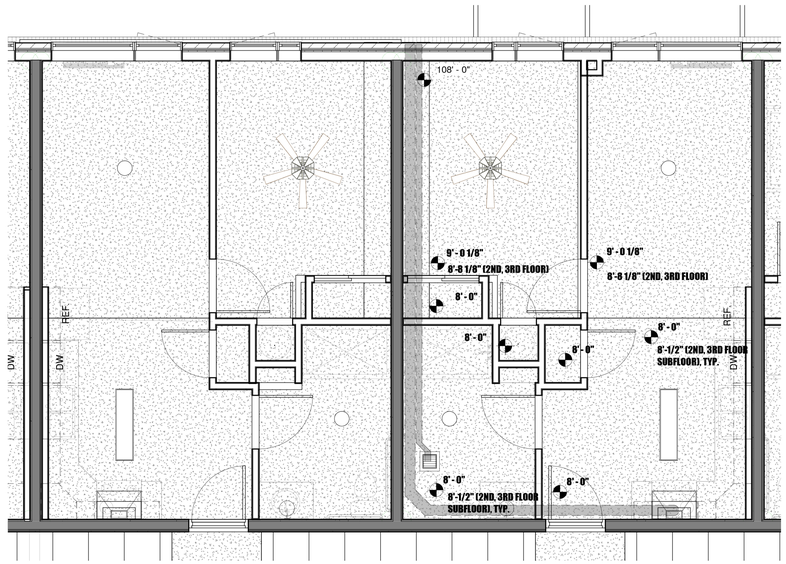

2 UNIT REF. CEIL. PLAN
1/4" = 1'-0"

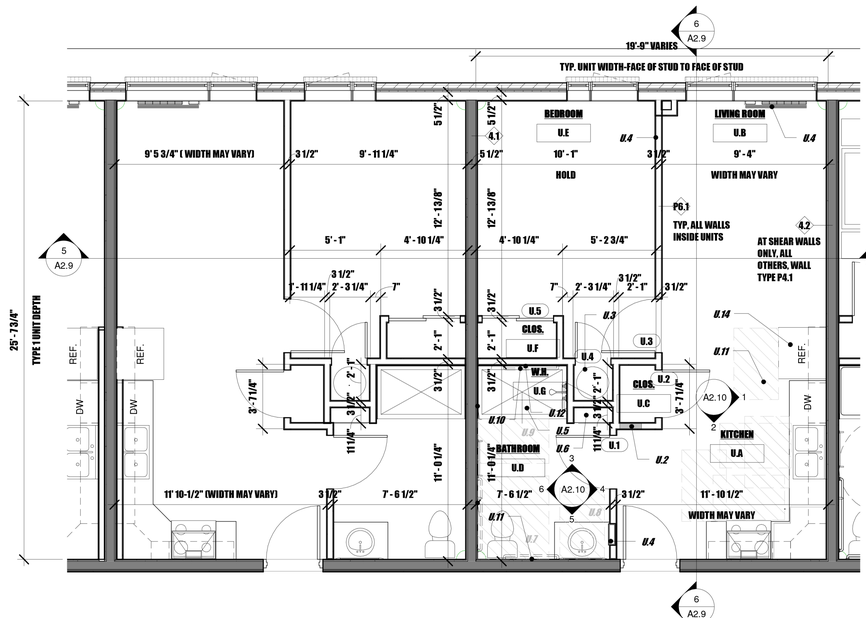

1 UNIT FLOOR PLAN
1/4" = 1'-0"

GENERAL NOTES:

1. REFER TO BUILDING TO OVERALL BUILDING PLANS FOR LOCATION OF NON-MIRRORED AND MIRRORED UNITS.
2. ENLARGED TYPICAL UNIT FLOOR PLANS AND REFLECTED CEILING PLANS ARE ONLY FOR INFORMATION CONTAINED WITHIN UNIT. REFER TO OVERALL BUILDING PLANS FOR ALL OTHER INFORMATION (CORRIDOR ENTRY DOORS, WINDOW LOCATIONS, ETC.).
3. DIMENSIONAL LAYOUT WITHIN UNITS SHALL BEGIN AT DEMISING WALLS ADJACENT TO BEDROOM AND BATHROOMS. SLIGHT UNIT WIDTH VARIATIONS MAY OCCUR.
4. ROOM AND DOOR NUMBERING DESIGNATIONS: U-REPRESENTS THE UNIT ROOM NUMBER (U-111, U-211, U-311); FOR EXAMPLE, LIVING ROOM U.B IS U-111.B, U-211.B, U-311.B; DOOR NUMBER U.4 IS U-111.4, U-211.4, U-311.4

UNIT NOTES:

U.1 AT SHEAR WALL LOCATIONS, FURR OUT WALL W/ 2X4 FRAMING W/ 5/8" GYP. BD. OVER. THIS CONDITION OCCURS AT THE FOLLOWING UNITS; U-104, U107, U-108, U-109, U-110, U-111, U-204, U-205, U-207, U-208, U-209, U-210, U-211, U-304, U-305, U-307, U-308, U-309, U-310, U-311. RE: 1A/A2.9

U.2 UNIT ELECTRICAL PANEL, RE: ELEC.

U.3 22" DIA. UNIT WATER HEATER, RE: PLUMBING.

U.4 PTAC UNIT, RE: MECH.

U.5 36" X 60" SHOWER PAN. NOTE: SHOWER SHALL COMPLY WITH ANSI 1004.11.3.1.3.3. NOTE: NO SEAT REINFORCEMENT IS REQUIRED AS PER SAME SECTION.

U.6 5/4" HARDBOARD SHELVES AT 12" O.C. VERTICAL, TOTAL OF 5 SHELVES

U.7 48" WIDE X 56" DEEP CLEAR FLOOR SPACE AT TOILET AS PER ANSI 1004.11.3.1.2.2

U.8 30" X 48" CLEAR FLOOR SPACE AT LAVATORY AS PER ANSI 1004.11.3.1.1, EXCEPTION

U.9 30" X 48" CLEAR FLOOR SPACE BEYOND ARC OF DOOR SWING AS PER ANSI 1004.11.2.1, EXCEPTION AND CLEAR FLOOR SPACE AS PER 1004.11.3.1.3.3

U.10 PROVIDE BLOCKING AT LOCATIONS SHOWN ON INTERIOR ELEVATIONS FOR POSSIBLE FUTURE INSTALLATION OF GRAB BARS AS PER 1004.11.1

U.11 30" X 48" CLEAR FLOOR SPACE AS PER ANSI SHOWN AT VARIOUS APPLIANCES

U.12 GYP BD./ RESILIENT CHANNEL AT UNDERSIDE OF FLOOR FRAMING SHALL BE CONTINUOUS OVER TOP OF ALL WALLS WITHIN UNIT. PROVIDE BLOCKING IN FLOOR FRAMING AS REQ'D AT ALL LOCATIONS.

U.13 IN LIEU OF GYP. BD. AT SHOWER, PROVIDE 1/2" BACKER BOARD AT 3 WALLS OF SHOWER.

U.14 APPLIANCES BY OWNER, INSTALL BY CONTRACTOR

DOOR NOTES:

COMP. COMPOSITE MATERIAL SIM. TO "MASONITE"

PT. PAINT

P.H. PRE-HUNG

WD. WOOD

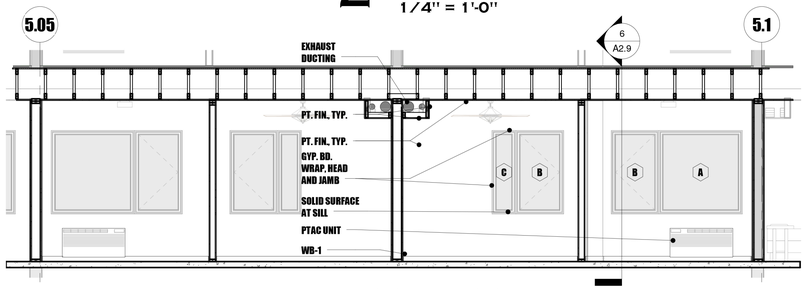

5 TYP UNIT SECTION 2
1/4" = 1'-0"

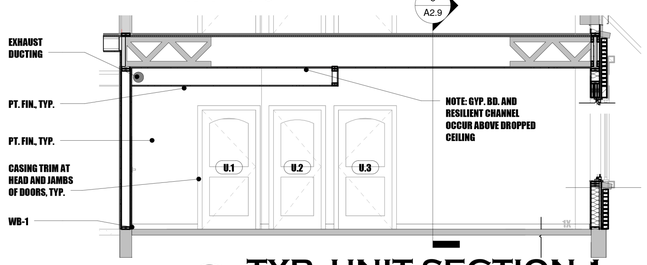

6 TYP. UNIT SECTION 1
1/4" = 1'-0"

4 ALTERNATE KITCHEN
1/4" = 1'-0"

3 TYPE A UNIT FLOOR PLAN
1/4" = 1'-0"

TYP. UNIT DOOR SCHEDULE

DOOR NUMBER	DOOR TYPE	Door WIDTH	Door HEIGHT	Door THICK.	Door MAT.	Door FIN.	RATING	HARDWARE	Frame FRAME TYPE	Frame FRAME MAT.	Frame FRAME FIN.	JAMB DETAIL	HEAD DETAIL	COMMENTS
U.1	F	3'-0"	6'-8"	13/8"	COMP.	PT	NOT REQ'D.		PH	WD.	PT	6/A7.2	6/A7.2	
U.2	F	2'-8"	6'-8"	13/8"	COMP.	PT	NOT REQ'D.		PH	WD.	PT	6/A7.2	6/A7.2	
U.3	F	3'-0"	6'-8"	13/8"	COMP.	PT	NOT REQ'D.		PH	WD	PT	6/A7.2	6/A7.2	
U.4	F	2'-0"	6'-8"	13/8"	COMP.	PT	NOT REQ'D.		PH	WD.	PT	6/A7.2	6/A7.2	
U.5	G	4'-0"	6'-8"	13/4"	COMP.	PT	NOT REQ'D.		PH	WD	PT	6/A7.2	6/A7.2	
U.6	F	3'-0"	6'-8"	13/8"	COMP.	PT	NOT REQ'D.		PH	WD	PT	6/A7.2	6/A7.2	

TYPICAL UNIT ROOM FINISH SCHEDULE

RM #	ROOM NAME	FLOOR FINISH	BASE FINISH	WALL FINISH NORTH	WALL FINISH EAST	WALL FINISH SOUTH	WALL FINISH WEST	CEILING FINISH	CEILING NOTES	CASEWORK CABINETS	CASEWORK COUNTERTOPS	SPECIALTIES	COMMENTS	RM #
U.A	KITCHEN	LVT-2	WD-1	PNT-1	PNT-1	PNT-1	PNT-1	PNT-5	RE: UNIT RCP SHEET A2.9	WOOD (PNT-4)	PL-1			U.A
U.B	LIVING ROOM	LVT-2	WD-1	PNT-1	PNT-1	PNT-1	PNT-1	PNT-5	RE: UNIT RCP SHEET A2.9			WINDOW BLINDS		U.B
U.C	CLOSET	LVT-2	WD-1	PNT-1	PNT-1	PNT-1	PNT-1	PNT-5	RE: UNIT RCP SHEET A2.9				RE: KITCHEN CLOSET NOTES	U.C
U.D	BATHROOM	LVT-2	WD-1	PNT-1	PNT-1	PNT-1	PNT-1	PNT-5	RE: UNIT RCP SHEET A2.9	WOOD (PNT-4)	PL-1		RE: BATHROOM CLOSET NOTES	U.D
U.E	BEDROOM	LVT-2	WD-1	PNT-1	PNT-1	PNT-1	PNT-1	PNT-5	RE: UNIT RCP SHEET A2.9			WINDOW BLINDS		U.E
U.F	CLOSET	LVT-2	WD-1	PNT-1	PNT-1	PNT-1	PNT-1	PNT-5	RE: UNIT RCP SHEET A2.9				RE: BEDROOM CLOSET NOTES	U.F
U.G	W.H.	LVT-2	WD-1	PNT-1	PNT-1	PNT-1	PNT-1	PNT-5	RE: UNIT RCP SHEET A2.9					U.G

HGF ARCHITECTS INC.

STATE OF COLORADO
AMY G. HURTIG-SMITH
400418
LICENSED ARCHITECT

Lazarus Designs
719.360.3164
ron@lazarusdesignsllc.com
lazarusdesigns.blogspot.com

A SUPPORTIVE HOUSING FACILITY

THE RIGHT PLACE
CARDINAL CAPITAL MGMT.

PROJECT NUMBER:	2019.90
PHASE:	PERMIT SET
PHASE ISSUE DATE:	4-27-20
DESIGNED BY:	RBP/AHS
SCALE:	As indicated

UNIT FLOOR PLANS

SHEET ISSUE DATE: 04/27/20

A2.9

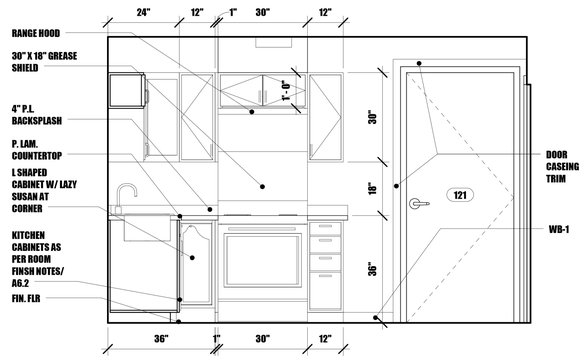

2 KITCHEN TYPE B-WALL 3
1/2" = 1'-0"

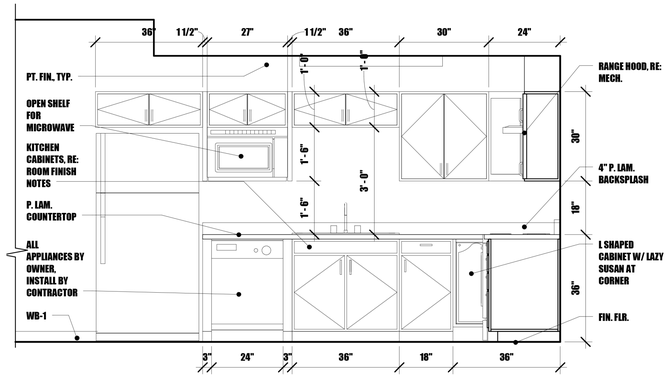

1 KITCHEN TYPE B-WALL 2
1/2" = 1'-0"

GENERAL NOTES:

1. REFER TO BUILDING TO OVERALL BUILDING PLANS FOR LOCATION OF NON-MIRRORED AND MIRRORED UNITS.
2. ENLARGED TYPICAL UNIT FLOOR PLANS AND REFLECTED CEILING PLANS ARE ONLY FOR INFORMATION CONTAINED WITHIN UNIT. REFER TO OVERALL BUILDING PLANS FOR ALL OTHER INFORMATION (CORRIDOR ENTRY DOORS, WINDOW LOCATIONS, ETC.).
3. DIMENSIONAL LAYOUT WITHIN UNITS SHALL BEGIN AT DEMISING WALLS ADJACENT TO BEDROOM AND BATHROOMS. SLIGHT UNIT WIDTH VARIATIONS MAY OCCUR.
4. ROOM AND DOOR NUMBERING DESIGINATIONS: U-REPRESENTS THE UNIT ROOM NUMBER (U-111, U-211, U-311); FOR EXAMPLE, LIVING ROOM U.8 IS U-111.8, U-211.8, U-311.8; DOOR NUMBER U.4 IS U-111.4, U-211.4, U-311.4

HGF ARCHITECTS INC.

STATE OF COLORADO
AMY G. HURTIG-SMITH
400418
LICENSED ARCHITECT

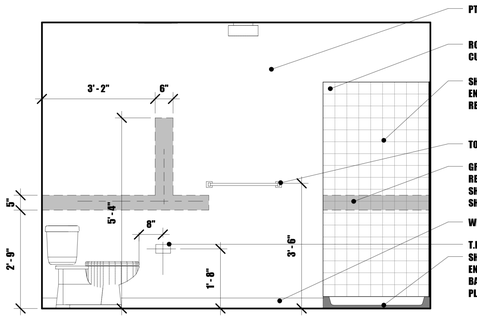

6 BATH.TYPE B-WALL 4
1/2" = 1'-0"

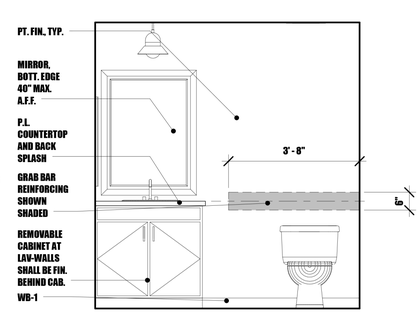

5 BATH.TYPE B-WALL 3
1/2" = 1'-0"

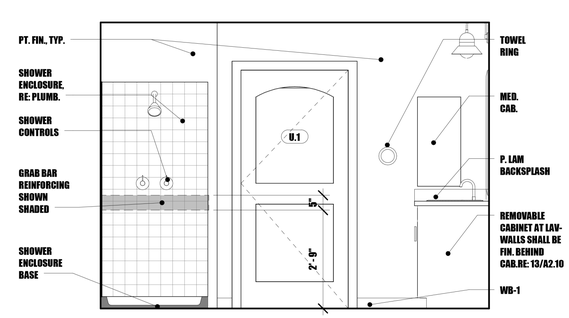

4 BATH.TYPE B-WALL 2
1/2" = 1'-0"

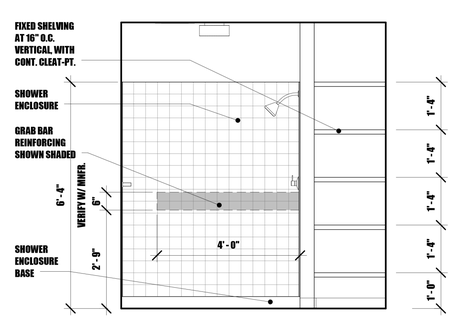

3 BATH. TYPE B-WALL 1
1/2" = 1'-0"

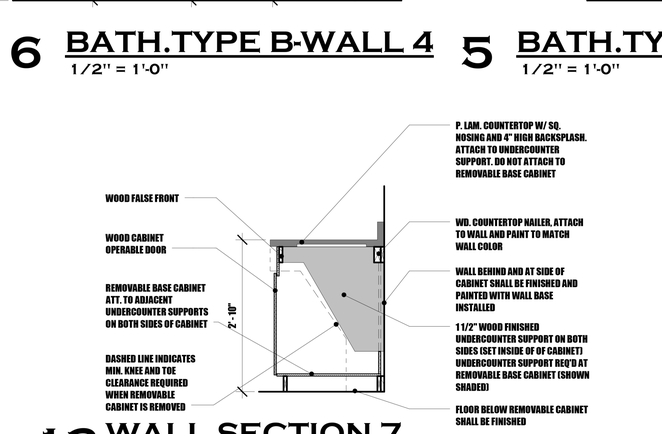

13 WALL SECTION 7
3/4" = 1'-0"

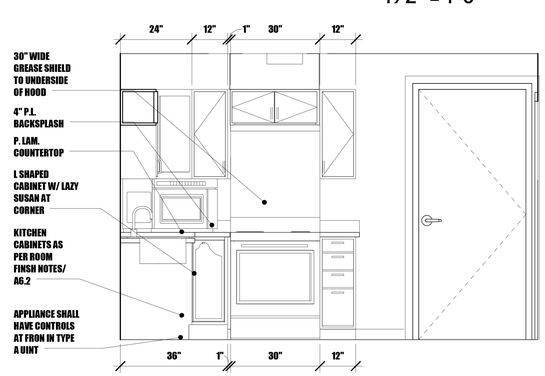

8 KITCHEN TYPE A-WALL 3
1/2" = 1'-0"

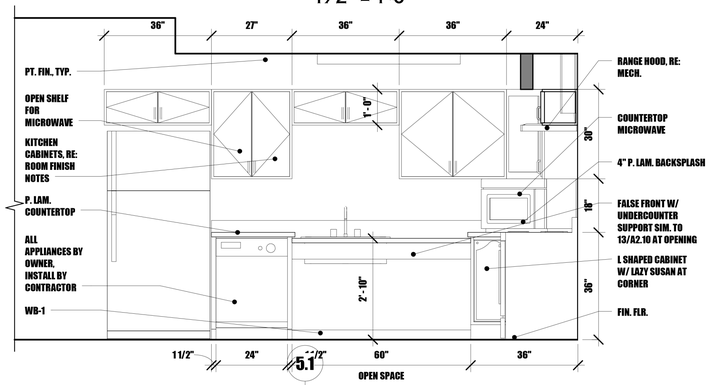

7 KITCHEN TYPE A-WALL 2
1/2" = 1'-0"

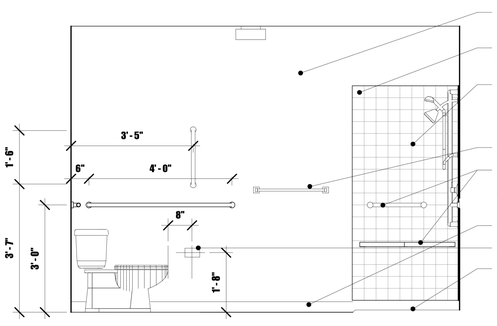

12 BATH. TYPE A-WALL 4
1/2" = 1'-0"

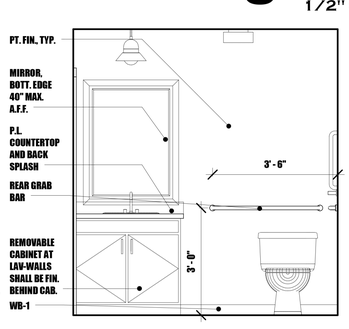

11 BATH. TYPE A-WALL 3
1/2" = 1'-0"

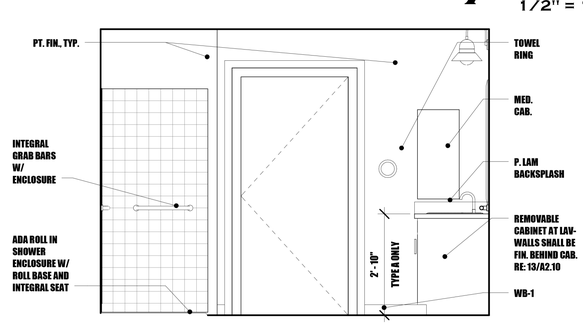

10 BATH TYPE A-WALL 2
1/2" = 1'-0"

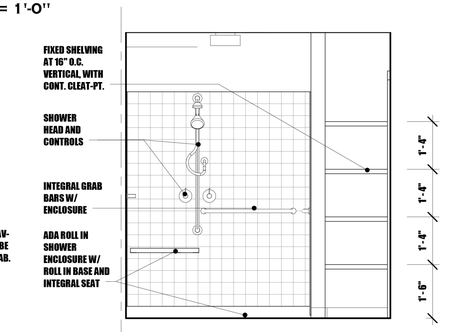

9 BATH. TYPE A-WALL 1
1/2" = 1'-0"

Lazarus Designs
719.360.3164
ron@lazarusdesignsllc.com
lazarusdesigns.blogspot.com

A SUPPORTIVE HOUSING FACILITY

THE RIGHT PLACE
CARDINAL CAPITAL MGMT.

PROJECT NUMBER:	2019.90
PHASE:	PERMIT SET
PHASE ISSUE DATE:	4-27-20
DESIGNED BY:	RBP/AHS
SCALE:	As indicated

INTERIOR ELEVATIONS-UNIT A AND UNIT B

SHEET ISSUE DATE: 04/27/20

A2.10

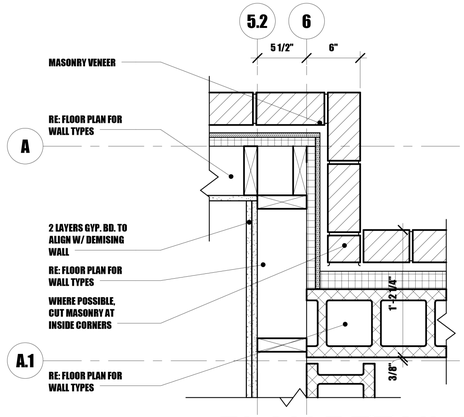

5 PLAN DETAIL 5
1 1/2" = 1'-0"

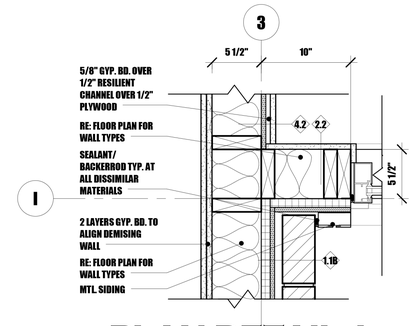

1 PLAN DETAIL 1
1 1/2" = 1'-0"

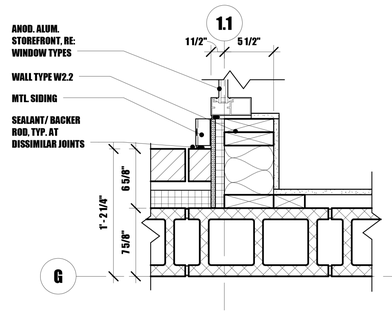

6 PLAN DETAIL 6
1 1/2" = 1'-0"

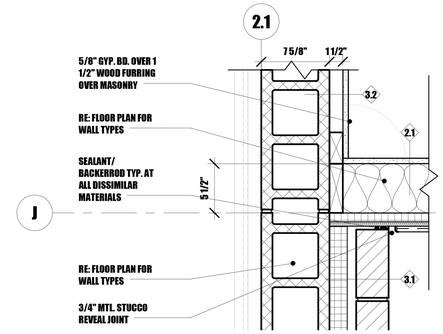

2 PLAN DETAIL 2
1 1/2" = 1'-0"

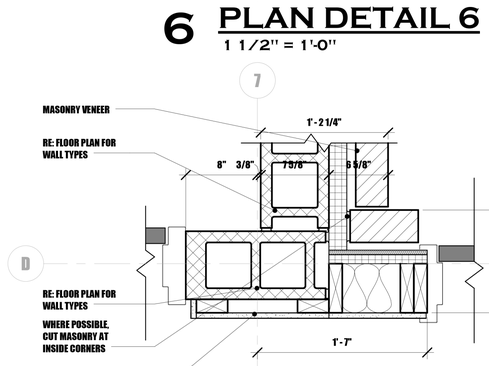

7 PLAN DETAIL 7
1 1/2" = 1'-0"

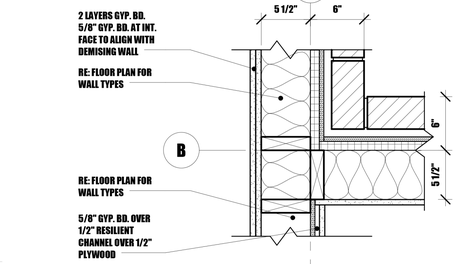

3 PLAN DETAIL 3
1 1/2" = 1'-0"

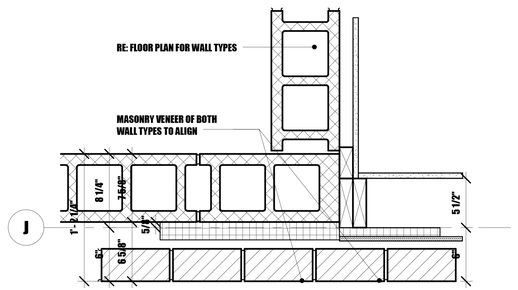

4 PLAN DETAIL 4
1 1/2" = 1'-0"

HGF ARCHITECTS INC.

STATE OF COLORADO
AMY G. HURTIG-SMITH
400418
LICENSED ARCHITECT

Lazarus Designs
719.360.3164
ron@lazarusdesignsllc.com
lazarusdesigns.blogspot.com

PROJECT NUMBER:	2019.90
PHASE:	PERMIT SET
PHASE ISSUE DATE:	4-27-20
DESIGNED BY:	RBP/AHS
SCALE:	1 1/2" = 1'-0"

PLAN DETAILS

SHEET ISSUE DATE: 04/27/20

A2.11

THE RIGHT PLACE
CARDINAL CAPITAL MGMT.
A SUPPORTIVE HOUSING FACILITY

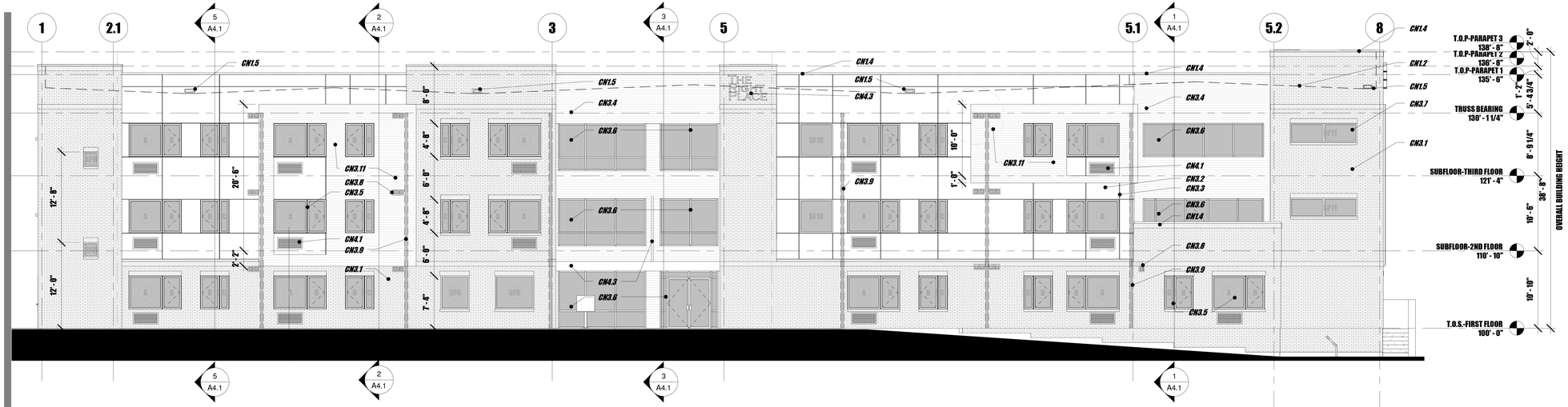

1 SOUTH ELEVATION

1/8" = 1'-0"

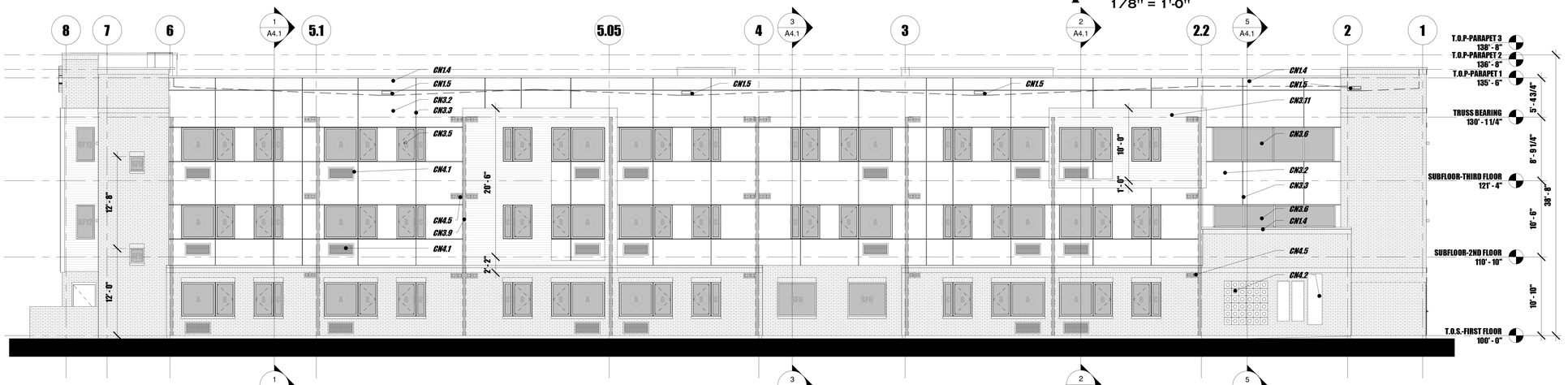

2 NORTH ELEVATION

1/8" = 1'-0"

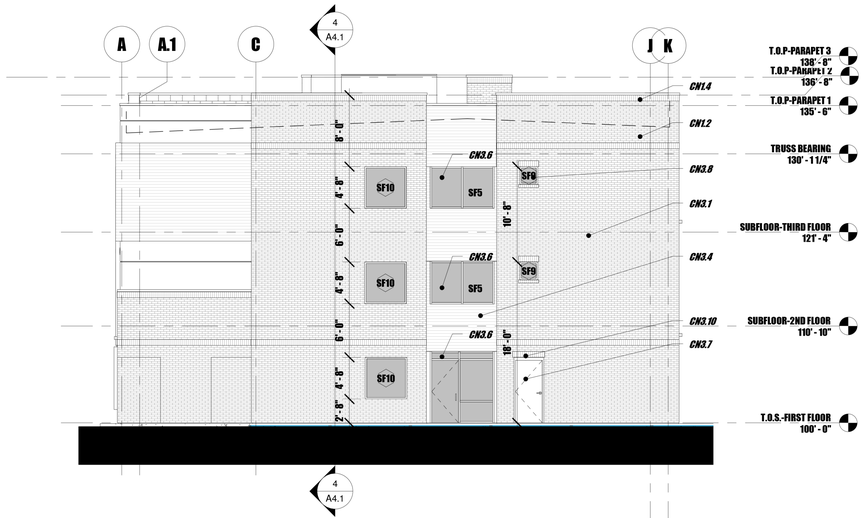

4 WEST ELEVATION

1/8" = 1'-0"

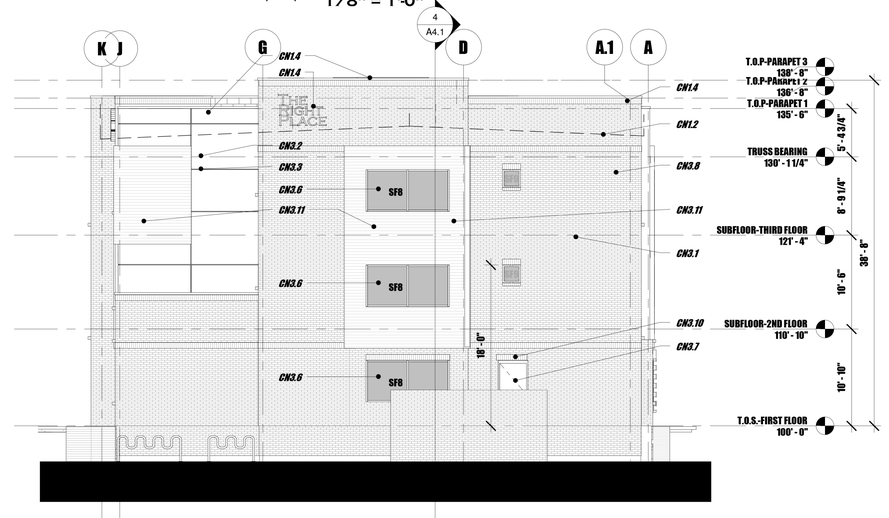

3 EAST ELEVATION

1/8" = 1'-0"

CONSTRUCTION NOTES:

CN1.1 RE: ROOF PLANS FOR ROOF TYPE

CN1.2 LINE OF ROOF BEHIND PARAPET SHOWN DASHED

CN1.3 PRE-MANUFACTURED WOOD ROOF TRUSSES, WEB CONFIGURATION AND TRUSS DESIGN BY TRUSS MNFR. RE: STRUCTURAL

CN1.4 24 GA. PRE-FINISHED MTL. CAP FLASHING

CN1.5 4" X 16", 24 GA. PRE-FINISHED MTL. OVERFLOW SCUPPER. RE:

CN1.6 TAPER BOARD INSUL.

CN1.7 ROOF DRAIN, RE: PLUMB.

CN1.8 PRE-MANUF. CONC. WALL CAP

CN1.9 SLOPING LVL ROOF JOISTS WITH TOP OF JOIST FLUSH WITH TOP OF TRUSS, RE: STRUCT.

CN1.10 ROOF TOP PEDESTAL PAVING OVER WATERPROOF MEMBRANE

CN1.11 CANT STRIP, TYP. AT ALL PARAPETS

CN1.12 TRUSS BLOCKING AS PER TRUSS MNFR. AND STRUCT.

CN1.13 ENTRY CANOPY ROOF SHALL BE: TPO ROOFING OVER PLYWOOD DECKING OVER STL. TUBE FRAMING W/ TYP. STUCCO OVER 7/8" HAT CHANNELS AT UNDERSIDE

CN2.1 FLOOR TYPE FT.1: TYPICAL FLOOR CONSTRUCTION SHALL BE GYPCRETE OVER WOOD FLOOR TRUSSES, RE: FLOOR TYPES FOR ADDIT. INFO

CN2.2 5/8" GYP. BOARD OVER RESILIENT CHANNEL

CN2.3 5/8" GYP. BD. OVER FRAMING, RE: REF. CEILING PLAN

CN2.4 SUSPENDED GRID CEILING, RE: REF. CEILING PLAN

CN2.5 SUSPENDED GYP. BD. CEILING, RE: REF. CEILING PLAN

CN2.6 RE: STRUCTURAL FOR TYP. HEADER, NOTE: PROVIDE 1" RIGID INSUL. SPACER AS SHOWN IN 2X HEADERS

CN2.7 4" CONC. SLAB OVER COMPACTED SUB GRADE

CN2.8 APPROX. LINE OF EXIST. GRADE, RE: CIVIL

CN2.9 WOOD FLOOR TRUSSES AND PERIMETER BLOCKING AS PER TRUSS MNFR. AND STRUCT.

CN2.10 TYP. STUCCO AT UNDERSIDE FRAMING

CN3.1 BRICK VENEER WALL, RE: FLOOR PLAN FOR WALL TYPES

CN3.2 STUCCO SYSTEM OVER TYP. 2 X 6 WOOD FRAMING, RE: FLOOR PLAN FOR WALL TYPES

CN3.3 3/4" ALUM. REVEAL JOINT IN STUCCO

CN3.4 BOX RIBBED MTL SIDING SYSTEM OVER 2 X 6 WOOD FRAMING, RE: FLOOR PLAN FOR WALL TYPES

CN3.5 COMPOSITE FRAME WINDOWS IN RESIDENTIAL UNITS ONLY, RE: FLOOR PLAN FOR WINDOW TYPES

CN3.6 ANOD. ALUM. STOREFRONT FRAMING RE: FLOOR PLAN FOR WINDOW TYPES

CN3.7 H.M. DOOR/ WINDOW, RE: FLOOR PLAN FOR DOOR NUMBERS/ WINDOW TYPES

CN3.8 ANOD. ALUM. WINDOW GLAZING, RE: FLOOR PLAN FOR WINDOW TYPES

CN3.9 LINE OF RESIDENTIAL UNIT DEMISING WALLS SHOWN DASHED AND SHADED

CN3.10 BRICK SOLDIER COURSE, TYP. OVER ALL MAS. OPENINGS/ CONTINUOUS WHERE SHADED

CN3.11 BOX RIBBED MTL. SIDING BUILDOUT, RE: X/XX FOR DETAILS

CN3.12 CONC. FOUNDATION WALL AND FOOTING, RE: STRUCT.

CN3.13 FOUNDATION WALL W/ BRICK LEDGE, RE: STRUCT.

CN3.14 BLOCKING AS REQUIRED AT TOP OF ALL WALL AT UNDERSIDE OF STRUCTURE

CN3.15 BRICK ROWLOCK AT TOP OF MASONRY AND AT SILLS OF MASONRY OPENING

CN4.1 PTAC UNITS, RE: MECH.

CN4.2 ELEC. METERS AND SERVICE ENTRANCE, RE: ELEC.

CN4.3 BUILDING SIGNAGE

CN4.4 EXPOSED STL. TUBE AND HANGER STL. HANGER, RE: 2/A5.2 AND STRUCT.

CN4.5 EXHAUST FAN AND RANGE HOOD EXHAUST GRILLS, RE: MECH.

CN4.6 DRAINAGE SWALE, RE: CIVIL

CN4.7 CONC. APRON OR SIDEWALK, SLOPE AWAY FROM BUILDING. RE: CIVIL

CN4.8 REFER TO A2.0/ A2.10 FOR INFORMATION ON RESIDENTIAL UNITS

CN4.9 1/4" EXP. MAT. AT PERIMETER OF ALL CONC. SLABS/ WALL JOINT

CN4.10 2" RIGID INSUL. WHERE SHOWN

CN4.11 STEEL BEAM AS PER STRUCT.

CN4.12 9 1/4" LVL JOIST/ BEAM AS PER STRUCT.

HGF ARCHITECTS INC.

STATE OF COLORADO
AMY G. HURTIG-SMITH
400418
LICENSED ARCHITECT

Lazarus Designs
719.360.3164
ron@lazarusdesignsllc.com
lazarusdesigns.blogspot.com

A SUPPORTIVE HOUSING FACILITY

THE RIGHT PLACE
CARDINAL CAPITAL MGMT.

PROJECT NUMBER:	2019.90
PHASE:	PERMIT SET
PHASE ISSUE DATE:	4-27-20
DESIGNED BY:	RBP/AHS
SCALE:	As indicated

EXTERIOR ELEVATIONS

SHEET ISSUE DATE: 04/27/20

A3.1

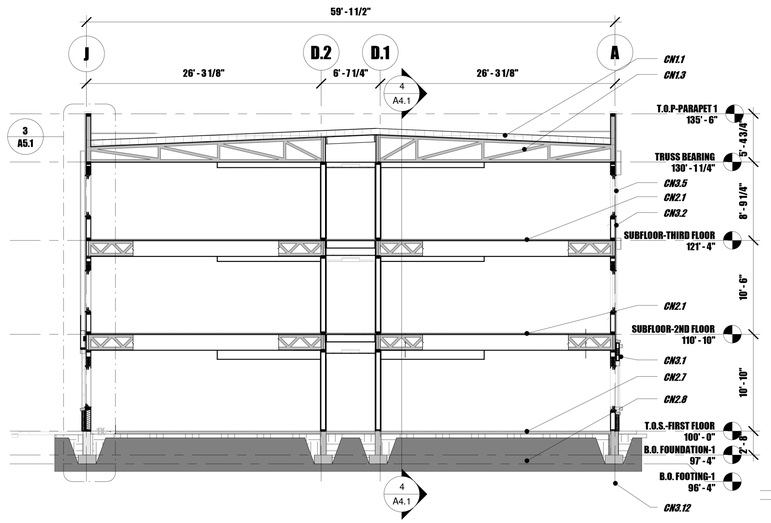

2 CROSS SECTION 3

1/8" = 1'-0"

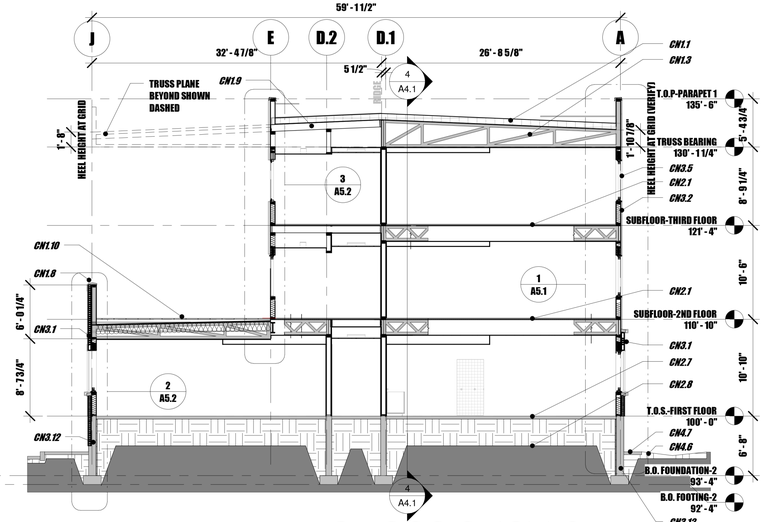

1 CROSS SECTION 1

1/8" = 1'-0"

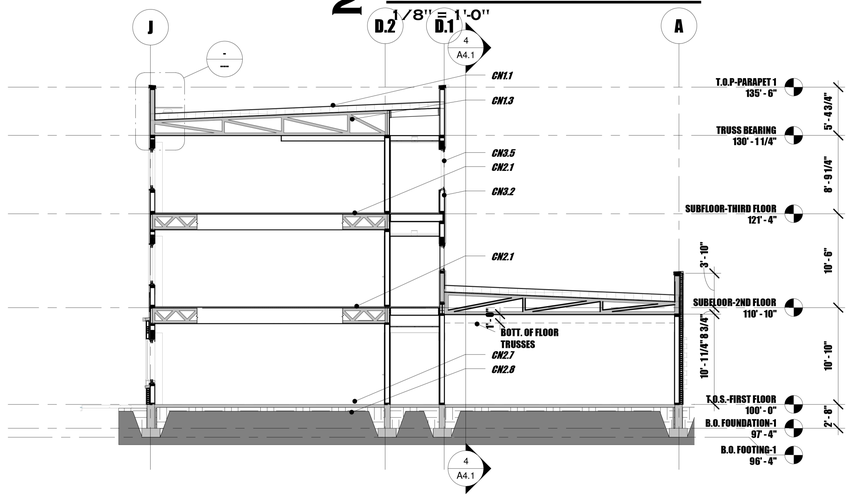

5 CROSS SECTION 4

1/8" = 1'-0"

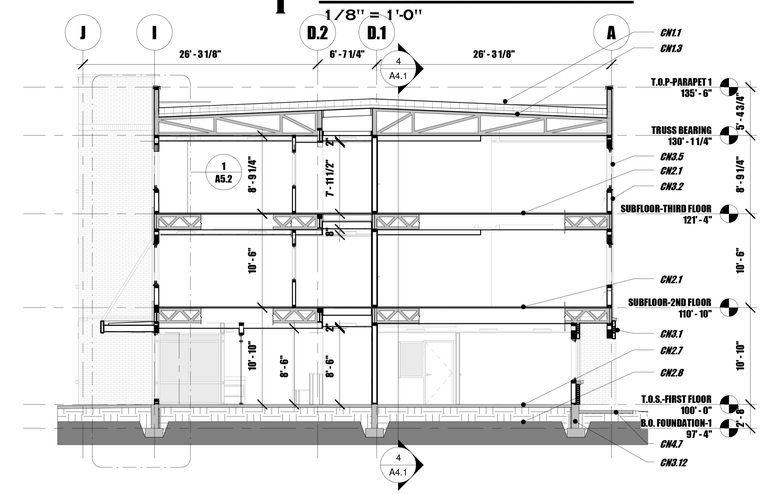

3 CROSS SECTION 2

1/8" = 1'-0"

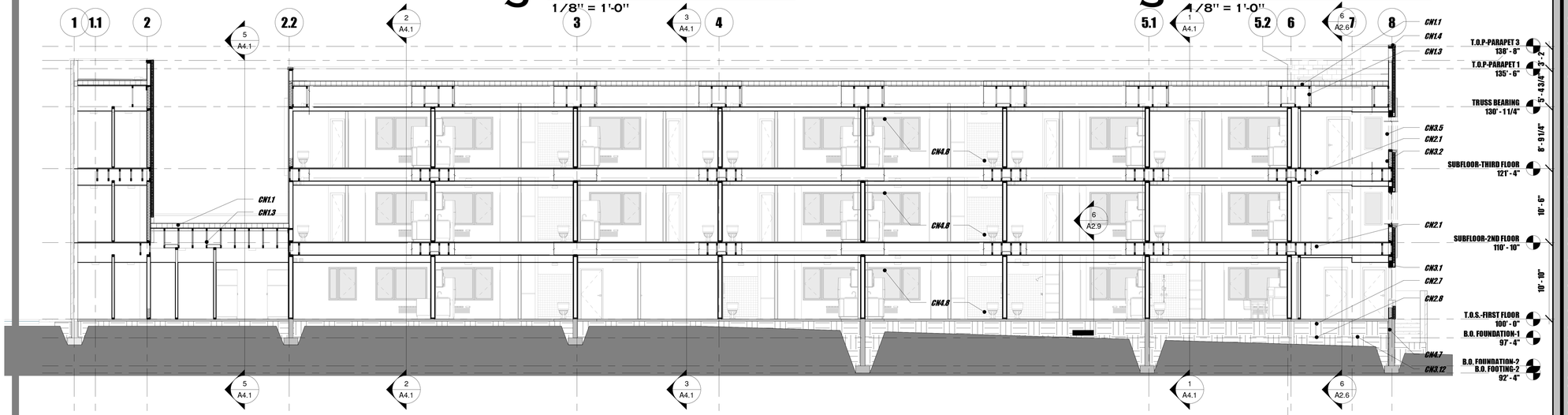

4 CROSS SECTION 5

1/8" = 1'-0"

CONSTRUCTION NOTES:

CN1.1 RE: ROOF PLANS FOR ROOF TYPE

CN1.2 LINE OF ROOF BEHIND PARAPET SHOWN DASHED

CN1.3 PRE-MANUFACTURED WOOD ROOF TRUSSES, WEB CONFIGURATION AND TRUSS DESIGN BY TRUSS MNFR. RE: STRUCTURAL

CN1.4 24 GA. PRE-FINISHED MTL. CAP FLASHING

CN1.5 4" X 16", 24 GA. PRE-FINISHED MTL. OVERFLOW SCUPPER. RE:

CN1.6 TAPER BOARD INSUL.

CN1.7 ROOF DRAIN, RE: PLUMB.

CN1.8 PRE-MANUF. CONC. WALL CAP

CN1.9 SLOPING LVL ROOF JOISTS WITH TOP OF JOIST FLUSH WITH TOP OF TRUSS, RE: STRUCT.

CN1.10 2 1/2" "ECO-MAX" RUBBER ROOF TILE AT EXTERIOR PATIO

CN1.11 CANT STRIP, TYP. AT ALL PARAPETS

CN1.12 TRUSS BLOCKING AS PER TRUSS MNFR. AND STRUCT.

CN1.13 ENTRY CANOPY ROOF SHALL BE: TPO ROOFING OVER PLYWOOD DECKING OVER STL TUBE FRAMING W/ TYP. STUCCO OVER 7/8" HAT CHANNELS AT UNDERSIDE

CN2.1 FLOOR TYPE FT.1: TYPICAL FLOOR CONSTRUCTION SHALL BE GYPCRETE OVER WOOD FLOOR TRUSSES, RE: FLOOR TYPES FOR ADDIT. INFO

CN2.2 5/8" GYP. BOARD OVER RESILIENT CHANNEL

CN2.3 5/8" GYP. BD. OVER FRAMING, RE: REF. CEILING PLAN

CN2.4 SUSPENDED GRID CEILING, RE: REF. CEILING PLAN

CN2.5 SUSPENDED GYP. BD. CEILING, RE: REF. CEILING PLAN

CN2.6 RE: STRUCTURAL FOR TYP. HEADER, NOTE: PROVIDE 1" RIGID INSUL. SPACER AS SHOWN IN 2X HEADERS

CN2.7 4" CONC. SLAB OVER COMPACTED SUB GRADE

CN2.8 APPROX. LINE OF EXIST. GRADE, RE: CIVIL

CN2.9 WOOD FLOOR TRUSSES AND PERIMETER BLOCKING AS PER TRUSS MNFR. AND STRUCT.

CN2.10 TYP. STUCCO AT UNDERSIDE FRAMING

CN3.1 BRICK VENEER WALL, RE: FLOOR PLAN FOR WALL TYPES

CN3.2 STUCCO SYSTEM OVER TYP. 2 X 6 WOOD FRAMING, RE: FLOOR PLAN FOR WALL TYPES

CN3.3 1/4" ALUM. REVEAL JOINT IN STUCCO

CN3.4 BOX RIBBED MTL SIDING SYSTEM OVER 2 X 6 WOOD FRAMING, RE: FLOOR PLAN FOR WALL TYPES

CN3.5 COMPOSITE FRAME WINDOWS IN RESIDENTIAL UNITS ONLY, RE: FLOOR PLAN FOR WINDOW TYPES

CN3.6 ANOD. ALUM. STOREFRONT FRAMING RE: FLOOR PLAN FOR WINDOW TYPES

CN3.7 H.M. DOOR/ WINDOW, RE: FLOOR PLAN FOR DOOR NUMBERS/ WINDOW TYPES

CN3.8 ANOD. ALUM. WINDOW GLAZING, RE: FLOOR PLAN FOR WINDOW TYPES

CN3.9 LINE OF RESIDENTIAL UNIT DEMISING WALLS SHOWN DASHED AND SHADED

CN3.10 BRICK SOLDIER COURSE, TYP. OVER ALL MAS. OPENINGS/ CONTINUOUS WHERE SHADED

CN3.11 BOX RIBBED MTL. SIDING BUILDOUT, RE: X/XX FOR DETAILS

CN3.12 CONC. FOUNDATION WALL AND FOOTING, RE: STRUCT.

CN3.13 FOUNDATION WALL W/ BRICK LEDGE, RE: STRUCT.

CN3.14 BLOCKING AS REQUIRED AT TOP OF ALL WALL AT UNDERSIDE OF STRUCTURE

CN3.15 BRICK ROWLOCK AT TOP OF MASONRY AND AT SILLS OF MASONRY OPENING

CN4.1 PTAC UNITS, RE: MECH.

CN4.2 ELEC. METERS AND SERVICE ENTRANCE, RE: ELEC.

CN4.3 BUILDING SIGNAGE

CN4.4 EXPOSED STL. TUBE AND HANGER STL. HANGER, RE: 2/A5.2 AND STRUCT.

CN4.5 EXHAUST FAN AND RANGE HOOD EXHAUST GRILLS, RE: MECH.

CN4.6 DRAINAGE SWALE, RE: CIVIL

CN4.7 CONC. APRON OR SIDEWALK, SLOPE AWAY FROM BUILDING. RE: CIVIL

CN4.8 REFER TO A2.9/ A2.10 FOR INFORMATION ON RESIDENTIAL UNITS

CN4.9 1/4" EXP. MAT. AT PERIMETER OF ALL CONC. SLABS/ WALL JOINT

CN4.10 2" RIGID INSUL. WHERE SHOWN

CN4.11 STEEL BEAM AS PER STRUCT.

CN4.12 9 1/4" LVL JOIST/ BEAM AS PER STRUCT.

HGF ARCHITECTS INC.

STATE OF COLORADO
AMY G. HURTIG-SMITH
400418
LICENSED ARCHITECT

Lazarus Designs
719.360.3164
ron@lazarusdesignsllc.com
lazarusdesigns.blogspot.com

PROJECT NUMBER:	2019.90
PHASE:	PERMIT SET
PHASE ISSUE DATE:	4-27-20
DESIGNED BY:	RBP/AHS
SCALE:	As indicated

BUILDING CROSS SECTIONS

SHEET ISSUE DATE: 04/27/20

A4.1

THE RIGHT PLACE
CARDINAL CAPITAL MGMT.
A SUPPORTIVE HOUSING FACILITY

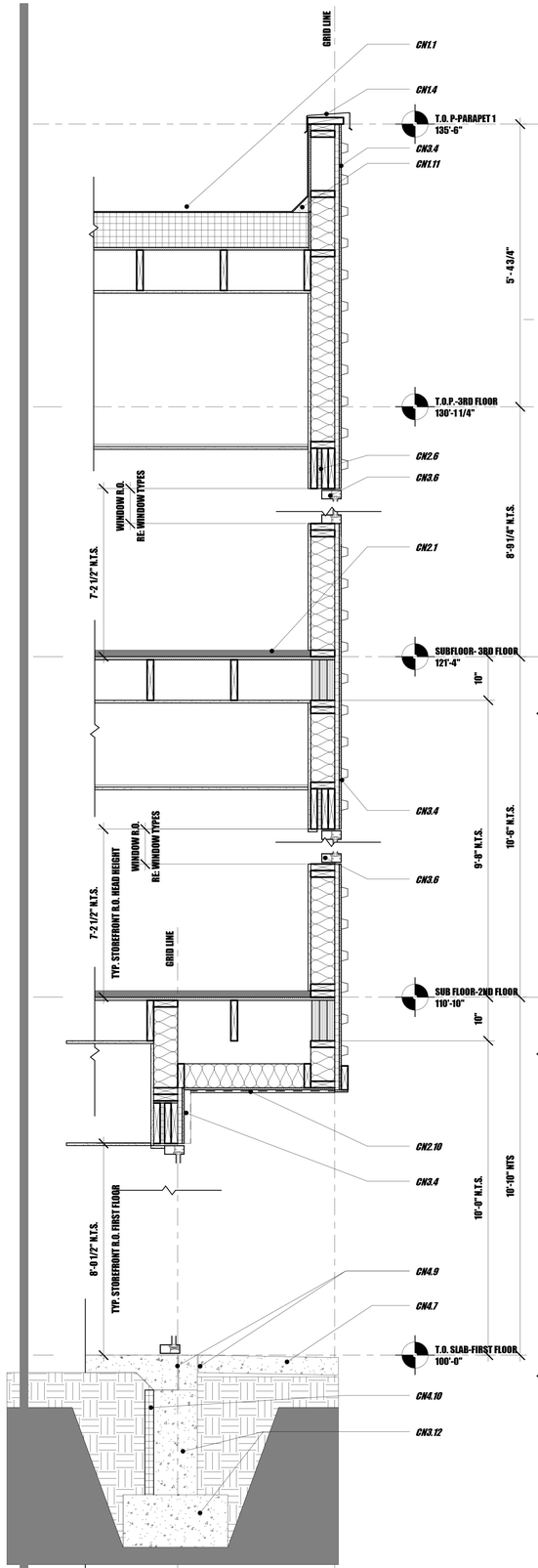

4 WALL SECTION 4

3/4" = 1'-0"

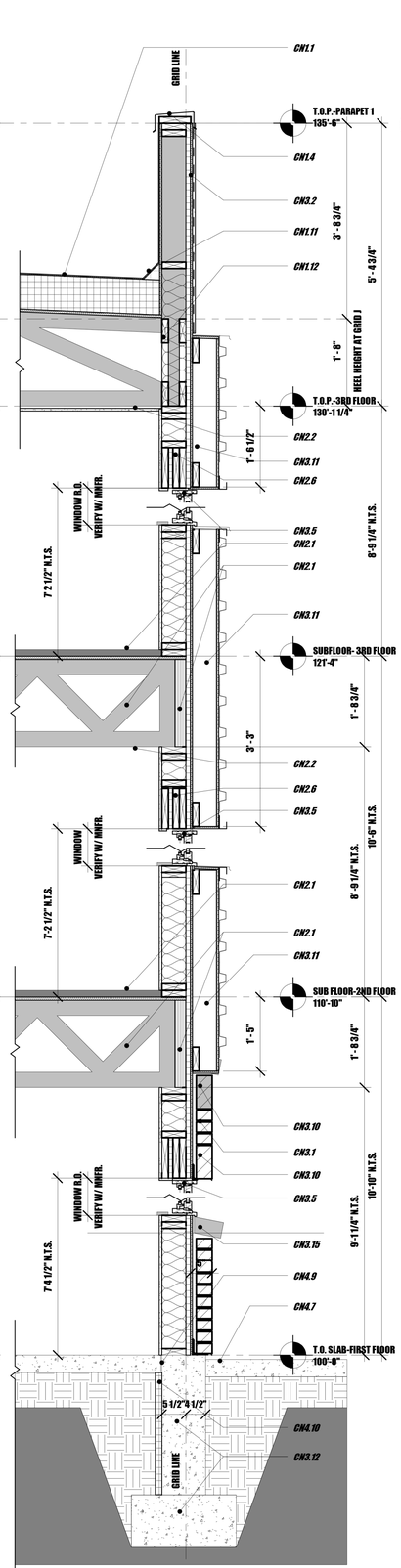

3 WALL SECTION 3

3/4" = 1'-0"

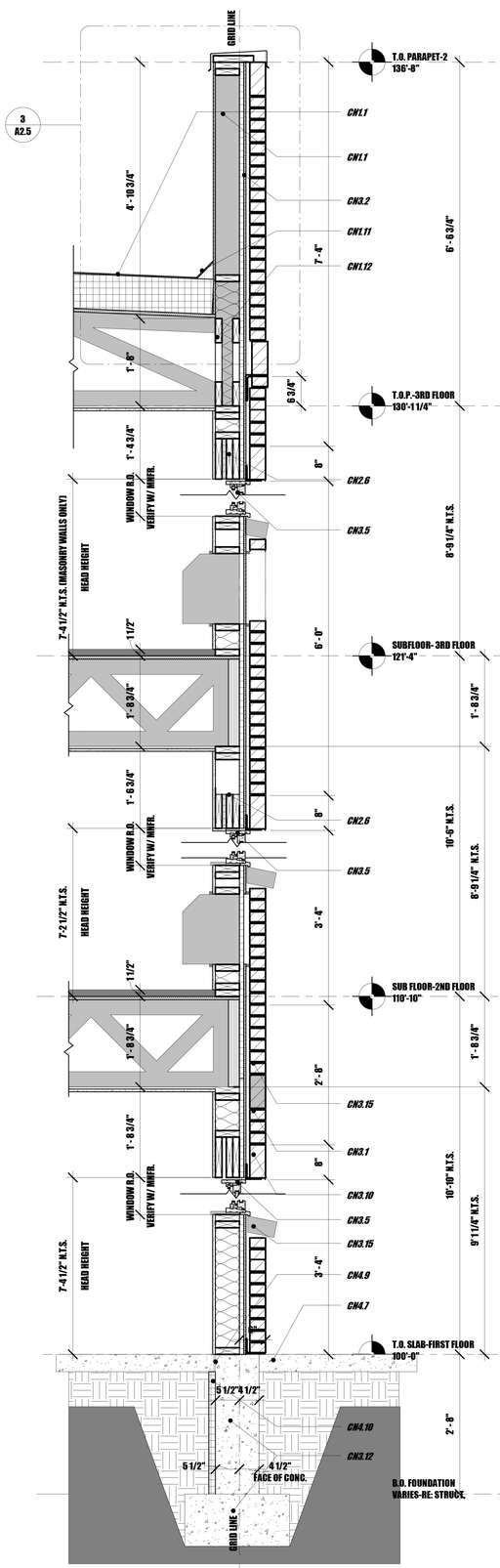

2 WALL SECTION 2

3/4" = 1'-0"

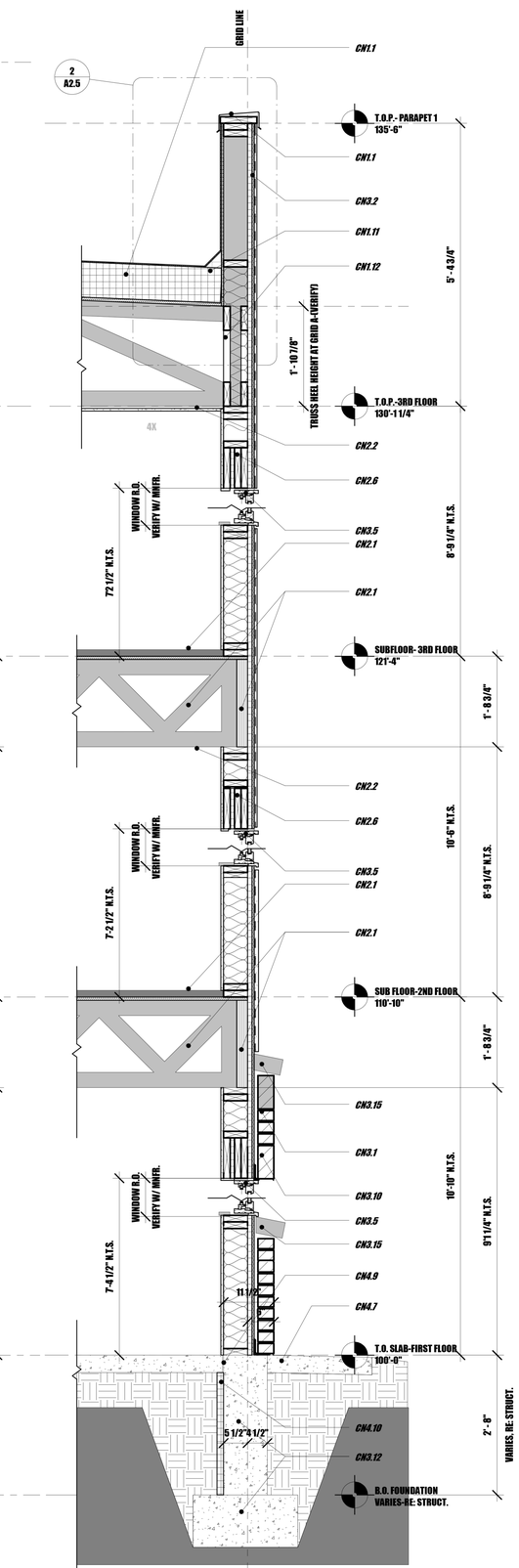

1 WALL SECTION 1

3/4" = 1'-0"

CONSTRUCTION NOTES:

CN1.1 RE: ROOF PLANS FOR ROOF TYPE

CN1.2 LINE OF ROOF BEHIND PARAPET SHOWN DASHED

CN1.3 PRE-MANUFACTURED WOOD ROOF TRUSSES, WEB CONFIGURATION AND TRUSS DESIGN BY TRUSS MNFR. RE: STRUCTURAL

CN1.4 24 GA. PRE-FINISHED MTL. CAP FLASHING

CN1.5 4" X 16", 24 GA. PRE-FINISHED MTL. OVERFLOW SCUPPER. RE:

CN1.6 TAPER BOARD INSUL.

CN1.7 ROOF DRAIN, RE: PLUMB.

CN1.8 PRE-MANUF. CONC. WALL CAP

CN1.9 SLOPING LVL ROOF JOISTS WITH TOP OF JOIST FLUSH WITH TOP OF TRUSS, RE: STRUCT.

CN1.10 2 1/2" "ECO-MAX" RUBBER ROOF TILE AT EXTERIOR PATIO

CN1.11 CANT STRIP, TYP. AT ALL PARAPETS

CN1.12 TRUSS BLOCKING AS PER TRUSS MNFR. AND STRUCT.

CN1.13 ENTRY CANOPY ROOF SHALL BE: TPO ROOFING OVER PLYWOOD DECKING OVER STL. TUBE FRAMING W/ TYP. STUCCO OVER 7/8" HAT CHANNELS AT UNDERSIDE

CN2.1 FLOOR TYPE FT.1: TYPICAL FLOOR CONSTRUCTION SHALL BE GYPCRETE OVER WOOD FLOOR TRUSSES, RE: FLOOR TYPES FOR ADDIT. INFO

CN2.2 5/8" GYP. BOARD OVER RESILIENT CHANNEL

CN2.3 5/8" GYP. BD. OVER FRAMING, RE: REF. CEILING PLAN

CN2.4 SUSPENDED GRID CEILING, RE: REF. CEILING PLAN

CN2.5 SUSPENDED GYP. BD. CEILING, RE: REF. CEILING PLAN

CN2.6 RE: STRUCTURAL FOR TYP. HEADER, NOTE: PROVIDE 1" RIGID INSUL. SPACER AS SHOWN IN 2X HEADERS

CN2.7 4" CONC. SLAB OVER COMPACTED SUB GRADE

CN2.8 APPROX. LINE OF EXIST. GRADE, RE: CIVIL

CN2.9 WOOD FLOOR TRUSSES AND PERIMETER BLOCKING AS PER TRUSS MNFR. AND STRUCT.

CN2.10 TYP. STUCCO AT UNDERSIDE FRAMING

CN3.1 BRICK VENEER WALL, RE: FLOOR PLAN FOR WALL TYPES

CN3.2 STUCCO SYSTEM OVER TYP. 2 X 6 WOOD FRAMING, RE: FLOOR PLAN FOR WALL TYPES

CN3.3 3/4" ALUM. REVEAL JOINT IN STUCCO

CN3.4 BOX RIBBED MTL SIDING SYSTEM OVER 2 X 6 WOOD FRAMING, RE: FLOOR PLAN FOR WALL TYPES

CN3.5 COMPOSITE FRAME WINDOWS IN RESIDENTIAL UNITS ONLY, RE: FLOOR PLAN FOR WINDOW TYPES

CN3.6 ANOD. ALUM. STOREFRONT FRAMING RE: FLOOR PLAN FOR WINDOW TYPES

CN3.7 H.M. DOOR/ WINDOW, RE: FLOOR PLAN FOR DOOR NUMBERS/ WINDOW TYPES

CN3.8 ANOD. ALUM. WINDOW GLAZING, RE: FLOOR PLAN FOR WINDOW TYPES

CN3.9 LINE OF RESIDENTIAL UNIT DEMISING WALLS SHOWN DASHED AND SHADED

CN3.10 BRICK SOLDIER COURSE, TYP. OVER ALL MAS. OPENINGS/ CONTINUOUS WHERE SHADED

CN3.11 BOX RIBBED MTL. SIDING BUILDOUT, RE: X/XX FOR DETAILS

CN3.12 CONC. FOUNDATION WALL AND FOOTING, RE: STRUCT.

CN3.13 FOUNDATION WALL W/ BRICK LEDGE, RE: STRUCT.

CN3.14 BLOCKING AS REQUIRED AT TOP OF ALL WALL AT UNDERSIDE OF STRUCTURE

CN3.15 BRICK ROWLOCK AT TOP OF MASONRY AND AT SILLS OF MASONRY OPENING

CN4.1 PTAC UNITS, RE: MECH.

CN4.2 ELEC. METERS AND SERVICE ENTRANCE, RE: ELEC.

CN4.3 BUILDING SIGNAGE

CN4.4 EXPOSED STL. TUBE AND HANGER STL. HANGER, RE: 2/A5.2 AND STRUCT.

CN4.5 EXHAUST FAN AND RANGE HOOD EXHAUST GRILLS, RE: MECH.

CN4.6 DRAINAGE SWALE, RE: CIVIL

CN4.7 CONC. APRON OR SIDEWALK, SLOPE AWAY FROM BUILDING. RE: CIVIL

CN4.8 REFER TO A2.9/ A2.10 FOR INFORMATION ON RESIDENTIAL UNITS

CN4.9 1/4" EXP. MAT. AT PERIMETER OF ALL CONC. SLABS/ WALL JOINT

CN4.10 2" RIGID INSUL. WHERE SHOWN

CN4.11 STEEL BEAM AS PER STRUCT.

CN4.12 9 1/4" LVL JOIST/ BEAM AS PER STRUCT.

HGF ARCHITECTS INC.

STATE OF COLORADO
AMY G. HURTIG-SMITH
400418
LICENSED ARCHITECT

Lazarus Designs
719.360.3164
ron@lazarusdesignsllc.com
lazarusdesigns.blogspot.com

PROJECT NUMBER:	2019.90
PHASE:	PERMIT SET
PHASE ISSUE DATE:	4-27-20
DESIGNED BY:	RBP/AHS
SCALE:	As indicated

WALL SECTIONS

SHEET ISSUE DATE: 04/27/20

A5.1

A SUPPORTIVE HOUSING FACILITY

THE RIGHT PLACE
CARDINAL CAPITAL MGMT.

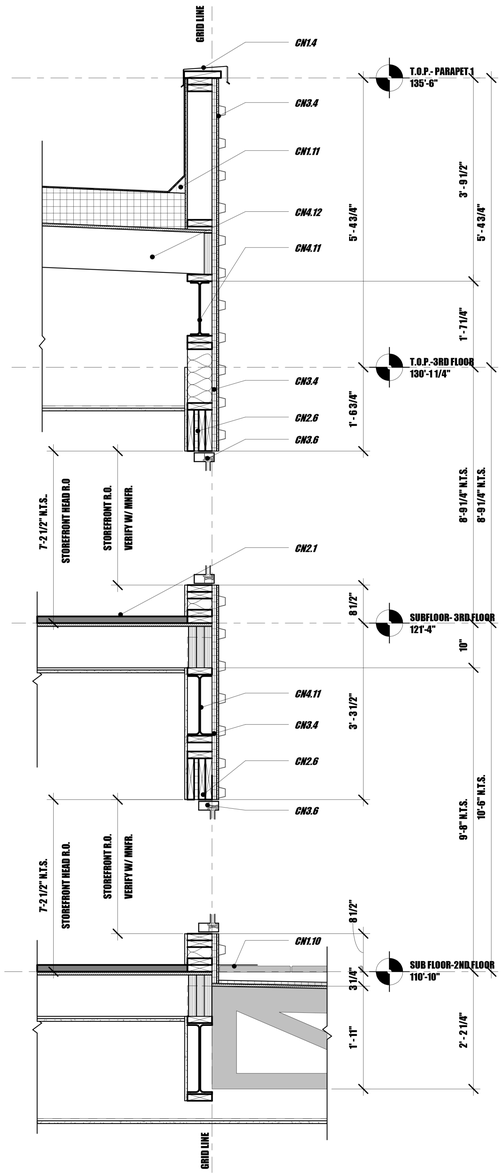

3 WALL SECTION 7
3/4" = 1'-0"

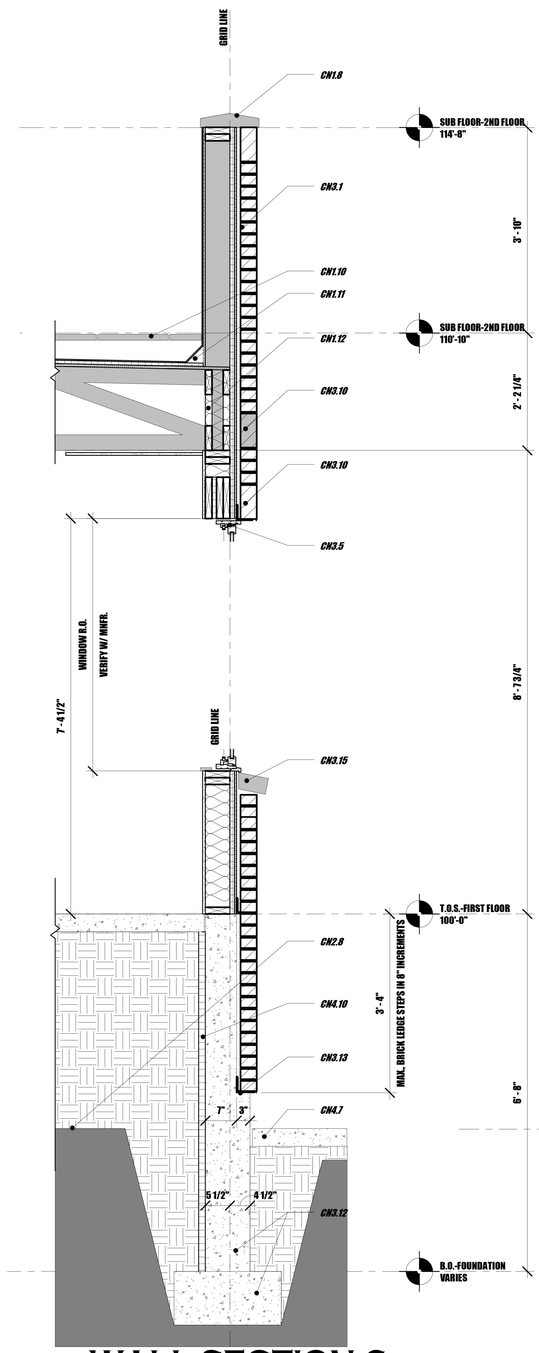

2 WALL SECTION 6
3/4" = 1'-0"

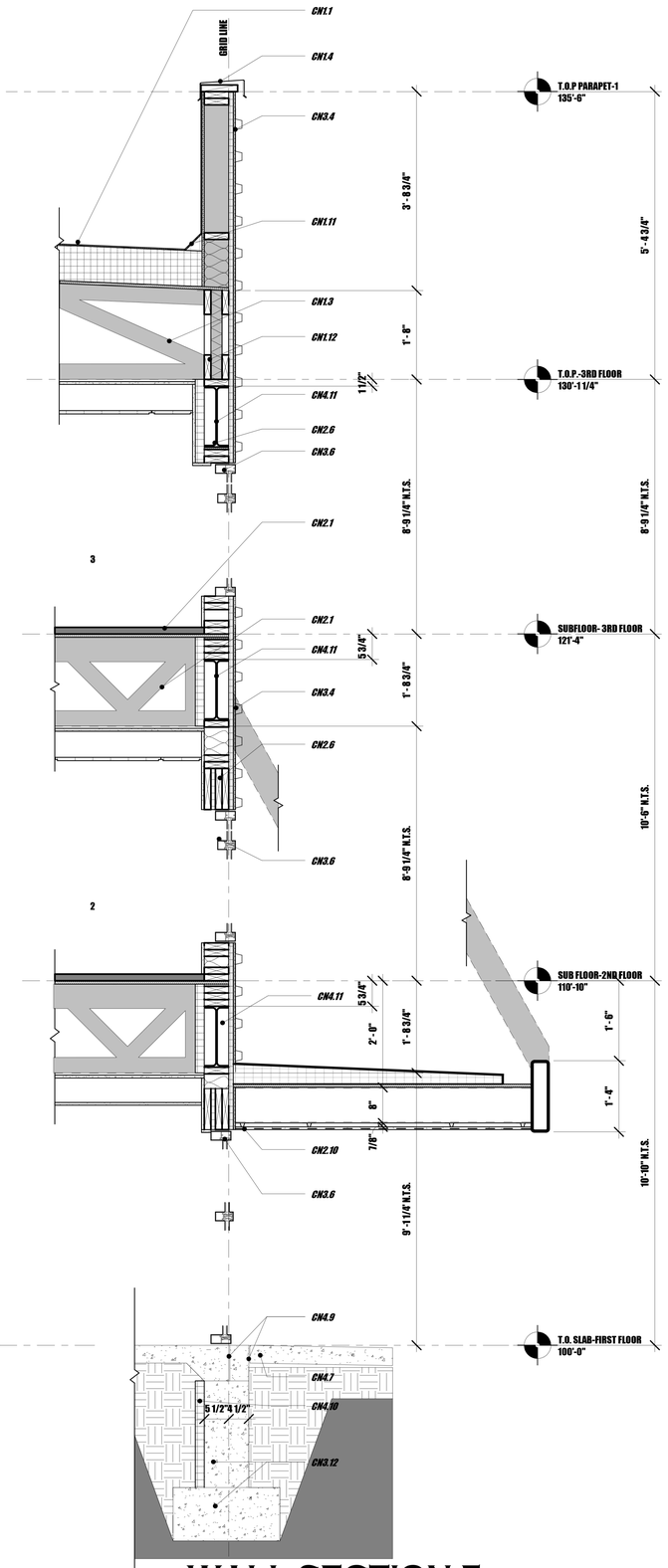

1 WALL SECTION 5
3/4" = 1'-0"

CONSTRUCTION NOTES:

CN1.1 RE: ROOF PLANS FOR ROOF TYPE

CN1.2 LINE OF ROOF BEHIND PARAPET SHOWN DASHED

CN1.3 PRE-MANUFACTURED WOOD ROOF TRUSSES, WEB CONFIGURATION AND TRUSS DESIGN BY TRUSS MNFR. RE: STRUCTURAL

CN1.4 24 GA. PRE-FINISHED MTL. CAP FLASHING

CN1.5 4" X 16", 24 GA. PRE-FINISHED MTL. OVERFLOW SCUPPER. RE:

CN1.6 TAPER BOARD INSUL.

CN1.7 ROOF DRAIN, RE: PLUMB.

CN1.8 PRE-MANUF. CONC. WALL CAP

CN1.9 SLOPING LVL ROOF JOISTS WITH TOP OF JOIST FLUSH WITH TOP OF TRUSS, RE: STRUCT.

CN1.10 2 1/2" ECO-MAX RUBBER ROOF TILES AT EXTERIOR PATIO FLOORING.

CN1.11 CANT STRIP, TYP. AT ALL PARAPETS

CN1.12 TRUSS BLOCKING AS PER TRUSS MNFR. AND STRUCT.

CN1.13 ENTRY CANOPY ROOF SHALL BE: TPO ROOFING OVER PLYWOOD DECKING OVER STL. TUBE FRAMING W/ TYP. STUCCO OVER 7/8" HAT CHANNELS AT UNDERSIDE

CN2.1 FLOOR TYPE FT.1: TYPICAL FLOOR CONSTRUCTION SHALL BE GYPCRETE OVER WOOD FLOOR TRUSSES, RE: FLOOR TYPES FOR ADDIT. INFO

CN2.2 5/8" GYP. BOARD OVER RESILIENT CHANNEL

CN2.3 5/8" GYP. BD. OVER FRAMING, RE: REF. CEILING PLAN

CN2.4 SUSPENDED GRID CEILING, RE: REF. CEILING PLAN

CN2.5 SUSPENDED GYP. BD. CEILING, RE: REF. CEILING PLAN

CN2.6 RE: STRUCTURAL FOR TYP. HEADER, NOTE: PROVIDE 1" RIGID INSUL. SPACER AS SHOWN IN 2X HEADERS

CN2.7 4" CONC. SLAB OVER COMPACTED SUB GRADE

CN2.8 APPROX. LINE OF EXIST. GRADE, RE: CIVIL

CN2.9 WOOD FLOOR TRUSSES AND PERIMETER BLOCKING AS PER TRUSS MNFR. AND STRUCT.

CN2.10 TYP. STUCCO AT UNDERSIDE FRAMING

CN3.1 BRICK VENEER WALL, RE: FLOOR PLAN FOR WALL TYPES

CN3.2 STUCCO SYSTEM OVER TYP. 2 X 6 WOOD FRAMING, RE: FLOOR PLAN FOR WALL TYPES

CN3.3 3/4" ALUM. REVEAL JOINT IN STUCCO

CN3.4 BOX RIBBED MTL SIDING SYSTEM OVER 2 X 6 WOOD FRAMING, RE: FLOOR PLAN FOR WALL TYPES

CN3.5 COMPOSITE FRAME WINDOWS IN RESIDENTIAL UNITS ONLY, RE: FLOOR PLAN FOR WINDOW TYPES

CN3.6 ANOD. ALUM. STOREFRONT FRAMING RE: FLOOR PLAN FOR WINDOW TYPES

CN3.7 H.M. DOOR/ WINDOW, RE: FLOOR PLAN FOR DOOR NUMBERS/ WINDOW TYPES

CN3.8 ANOD. ALUM. WINDOW GLAZING, RE: FLOOR PLAN FOR WINDOW TYPES

CN3.9 LINE OF RESIDENTIAL UNIT DEMISING WALLS SHOWN DASHED AND SHADED

CN3.10 BRICK SOLDIER COURSE, TYP. OVER ALL MAS. OPENINGS/ CONTINUOUS WHERE SHADED

CN3.11 BOX RIBBED MTL. SIDING BUILDOUT, RE: X/XX FOR DETAILS

CN3.12 CONC. FOUNDATION WALL AND FOOTING, RE: STRUCT.

CN3.13 FOUNDATION WALL W/ BRICK LEDGE, RE: STRUCT.

CN3.14 BLOCKING AS REQUIRED AT TOP OF ALL WALL AT UNDERSIDE OF STRUCTURE

CN3.15 BRICK ROWLOCK AT TOP OF MASONRY AND AT SILLS OF MASONRY OPENING

CN4.1 PTAC UNITS, RE: MECH.

CN4.2 ELEC. METERS AND SERVICE ENTRANCE, RE: ELEC.

CN4.3 BUILDING SIGNAGE

CN4.4 EXPOSED STL. TUBE AND HANGER STL. HANGER, RE: 2/A3.2 AND STRUCT.

CN4.5 EXHAUST FAN AND RANGE HOOD EXHAUST GRILLS, RE: MECH.

CN4.6 DRAINAGE SWALE, RE: CIVIL

CN4.7 CONC. APRON OR SIDEWALK, SLOPE AWAY FROM BUILDING. RE: CIVIL

CN4.8 REFER TO A2.9/ A2.10 FOR INFORMATION ON RESIDENTIAL UNITS

CN4.9 1/4" EXP. MAT. AT PERIMETER OF ALL CONC. SLABS/ WALL JOINT

CN4.10 2" RIGID INSUL. WHERE SHOWN

CN4.11 STEEL BEAM AS PER STRUCT.

CN4.12 9 1/4" LVL JOIST/ BEAM AS PER STRUCT.

HGF ARCHITECTS INC.

STATE OF COLORADO
AMY G. HURTIG-SMITH
400418
LICENSED ARCHITECT

Lazarus Designs
719.360.3164
ron@lazarusdesignsllc.com
lazarusdesigns.blogspot.com

PROJECT NUMBER:	2019.90
PHASE:	PERMIT SET
PHASE ISSUE DATE:	4-27-20
DESIGNED BY:	RBP/AHS
SCALE:	As indicated

WALL SECTIONS

SHEET ISSUE DATE: 04/27/20

A5.2

THE RIGHT PLACE
CARDINAL CAPITAL MGMT.
A SUPPORTIVE HOUSING FACILITY

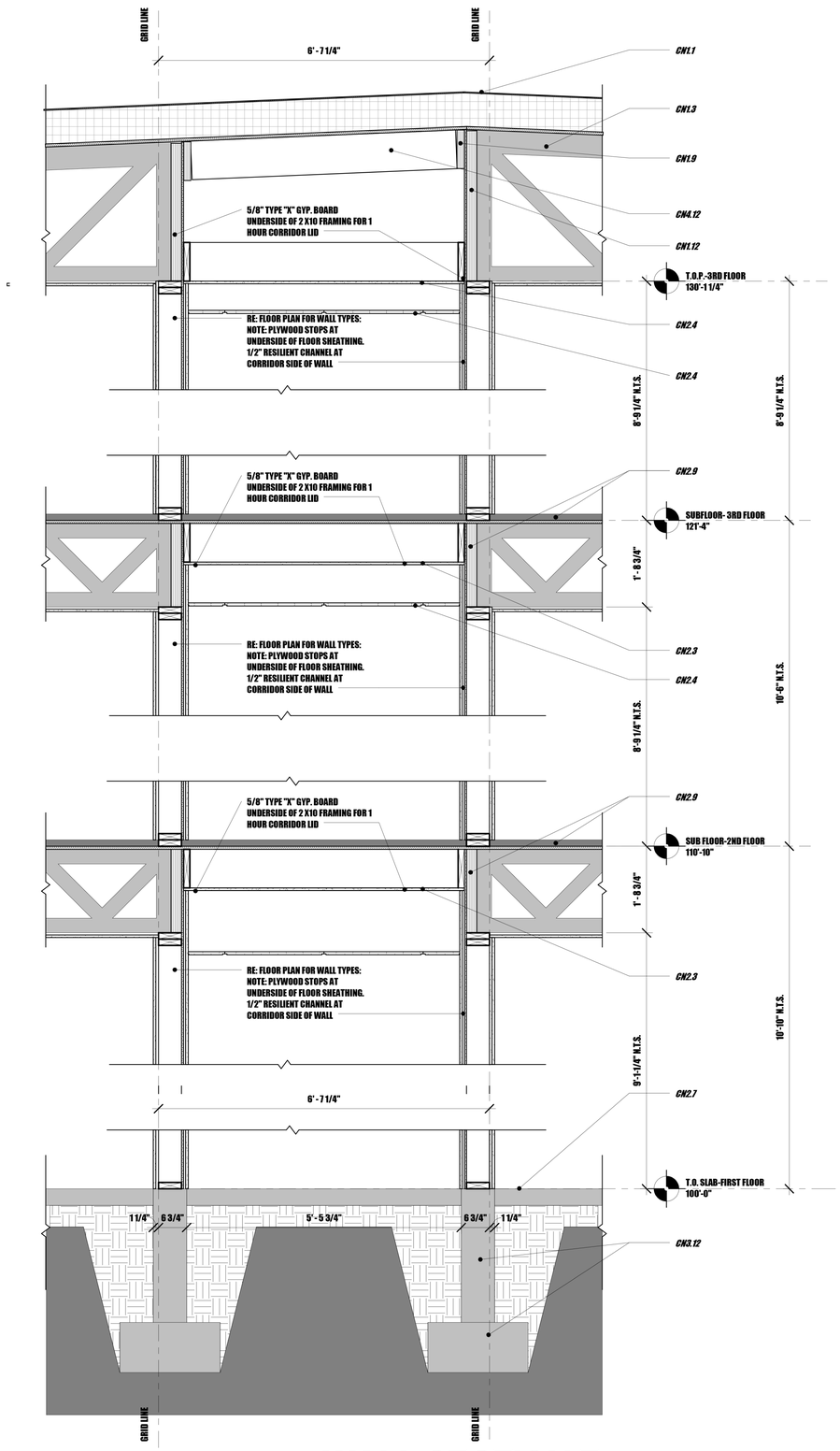

1 WALL SECTION 7

3/4" = 1'-0"

CONSTRUCTION NOTES:

CN1.1 RE: ROOF PLANS FOR ROOF TYPE

CN1.2 LINE OF ROOF BEHIND PARAPET SHOWN DASHED

CN1.3 PRE-MANUFACTURED WOOD ROOF TRUSSES, WEB CONFIGURATION AND TRUSS DESIGN BY TRUSS MNFR. RE: STRUCTURAL

CN1.4 24 GA. PRE-FINISHED MTL. CAP FLASHING

CN1.5 4" X 16", 24 GA. PRE-FINISHED MTL. OVERFLOW SCUPPER. RE:

CN1.6 TAPER BOARD INSUL.

CN1.7 ROOF DRAIN, RE: PLUMB.

CN1.8 PRE-MANUF. CONC. WALL CAP

CN1.9 SLOPING LVL ROOF JOISTS WITH TOP OF JOIST FLUSH WITH TOP OF TRUSS, RE: STRUCT.

CN1.10 2 1/2" "ECO-MAX" RUBBER ROOF TILE AT EXTERIOR PATIO

CN1.11 CANT STRIP, TYP. AT ALL PARAPETS

CN1.12 TRUSS BLOCKING AS PER TRUSS MNFR. AND STRUCT.

CN1.13 ENTRY CANOPY ROOF SHALL BE: TPO ROOFING OVER PLYWOOD DECKING OVER STL. TUBE FRAMING W/ TYP. STUCCO OVER 7/8" HAT CHANNELS AT UNDERSIDE

CN2.1 FLOOR TYPE FT.1: TYPICAL FLOOR CONSTRUCTION SHALL BE GYPCRETE OVER WOOD FLOOR TRUSSES, RE: FLOOR TYPES FOR ADDIT. INFO

CN2.2 5/8" GYP. BOARD OVER RESILIENT CHANNEL

CN2.3 5/8" GYP. BD. OVER FRAMING, RE: REF. CEILING PLAN

CN2.4 SUSPENDED GRID CEILING, RE: REF. CEILING PLAN

CN2.5 SUSPENDED GYP. BD. CEILING, RE: REF. CEILING PLAN

CN2.6 RE: STRUCTURAL FOR TYP. HEADER, NOTE: PROVIDE 1" RIGID INSUL. SPACER AS SHOWN IN 2X HEADERS

CN2.7 4" CONC. SLAB OVER COMPACTED SUB GRADE

CN2.8 APPROX. LINE OF EXIST. GRADE, RE: CIVIL

CN2.9 WOOD FLOOR TRUSSES AND PERIMETER BLOCKING AS PER TRUSS MNFR. AND STRUCT.

CN2.10 TYP. STUCCO AT UNDERSIDE FRAMING

CN3.1 BRICK VENEER WALL, RE: FLOOR PLAN FOR WALL TYPES

CN3.2 STUCCO SYSTEM OVER TYP. 2 X 6 WOOD FRAMING, RE: FLOOR PLAN FOR WALL TYPES

CN3.3 3/4" ALUM. REVEAL JOINT IN STUCCO

CN3.4 BOX RIBBED MTL SIDING SYSTEM OVER 2 X 6 WOOD FRAMING, RE: FLOOR PLAN FOR WALL TYPES

CN3.5 COMPOSITE FRAME WINDOWS IN RESIDENTIAL UNITS ONLY, RE: FLOOR PLAN FOR WINDOW TYPES

CN3.6 ANOD. ALUM. STOREFRONT FRAMING RE: FLOOR PLAN FOR WINDOW TYPES

CN3.7 H.M. DOOR/ WINDOW, RE: FLOOR PLAN FOR DOOR NUMBERS/ WINDOW TYPES

CN3.8 ANOD. ALUM. WINDOW GLAZING, RE: FLOOR PLAN FOR WINDOW TYPES

CN3.9 LINE OF RESIDENTIAL UNIT DEMISING WALLS SHOWN DASHED AND SHADED

CN3.10 BRICK SOLDIER COURSE, TYP. OVER ALL MAS. OPENINGS/ CONTINUOUS WHERE SHADED

CN3.11 BOX RIBBED MTL. SIDING BUILDOUT, RE: X/XX FOR DETAILS

CN3.12 CONC. FOUNDATION WALL AND FOOTING, RE: STRUCT.

CN3.13 FOUNDATION WALL W/ BRICK LEDGE, RE: STRUCT.

CN3.14 BLOCKING AS REQUIRED AT TOP OF ALL WALL AT UNDERSIDE OF STRUCTURE

CN3.15 BRICK ROWLOCK AT TOP OF MASONRY AND AT SILLS OF MASONRY OPENING

CN4.1 PTAC UNITS, RE: MECH.

CN4.2 ELEC. METERS AND SERVICE ENTRANCE, RE: ELEC.

CN4.3 BUILDING SIGNAGE

CN4.4 EXPOSED STL. TUBE AND HANGER STL. HANGER, RE: 2/A5.2 AND STRUCT.

CN4.5 EXHAUST FAN AND RANGE HOOD EXHAUST GRILLS, RE: MECH.

CN4.6 DRAINAGE SWALE, RE: CIVIL

CN4.7 CONC. APRON OR SIDEWALK, SLOPE AWAY FROM BUILDING. RE: CIVIL

CN4.8 REFER TO A2.9/ A2.10 FOR INFORMATION ON RESIDENTIAL UNITS

CN4.9 1/4" EXP. MAT. AT PERIMETER OF ALL CONC. SLABS/ WALL JOINT

CN4.10 2" RIGID INSUL. WHERE SHOWN

CN4.11 STEEL BEAM AS PER STRUCT.

CN4.12 9 1/4" LVL JOIST/ BEAM AS PER STRUCT.

HGF ARCHITECTS INC.

STATE OF COLORADO
AMY G. HURTIG-SMITH
400418
LICENSED ARCHITECT

Lazarus Designs
719.360.3164
ron@lazarusdesignsllc.com
lazarusdesigns.blogspot.com

PROJECT NUMBER:	2019.90
PHASE:	PERMIT SET
PHASE ISSUE DATE:	4-27-20
DESIGNED BY:	RBP/AHS
SCALE:	As indicated

WALL SECTIONS

SHEET ISSUE DATE: 04/27/20

A5.3

THE RIGHT PLACE
CARDINAL CAPITAL MGMT.
A SUPPORTIVE HOUSING FACILITY

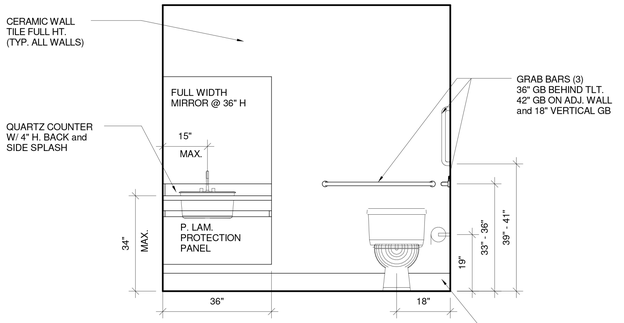

3 RESTROOM 107-EAST

1/2" = 1'-0"

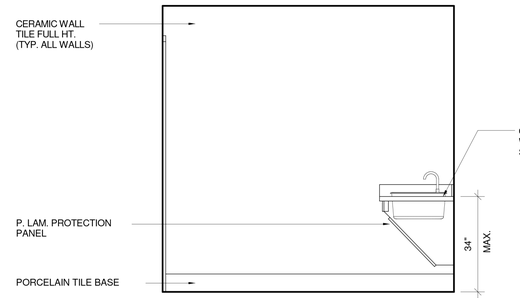

2 RESTROOM 107-NORTH

1/2" = 1'-0"

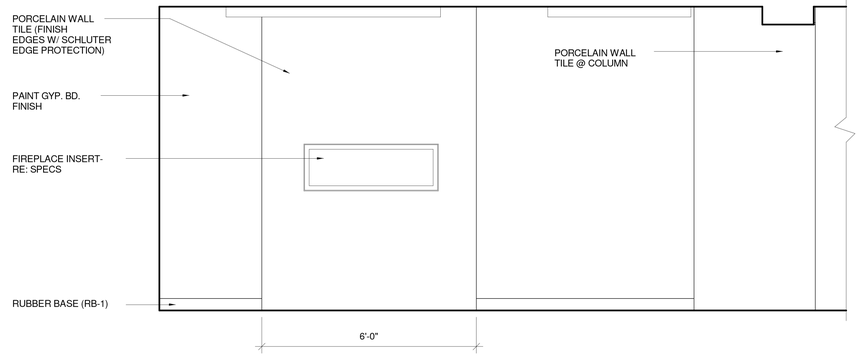

1 LOBBY 102-WEST

1/2" = 1'-0"

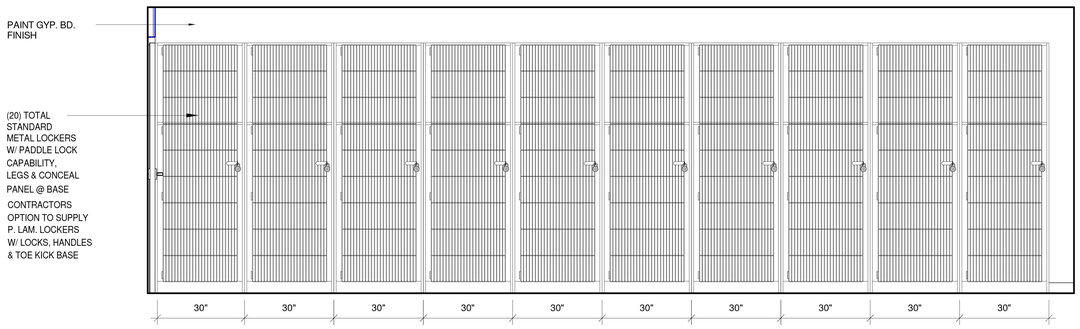

6 TENANT STORAGE 114-EAST

1/2" = 1'-0"

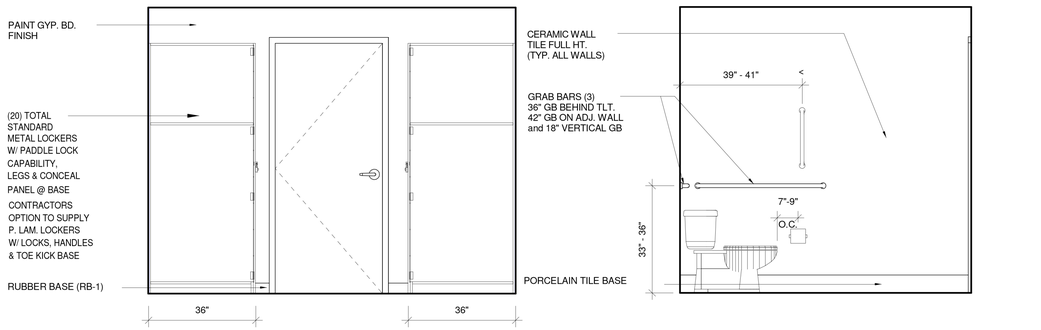

5 TENANT STORAGE 114-NORTH

1/2" = 1'-0"

4 RESTROOM 107-SOUTH

1/2" = 1'-0"

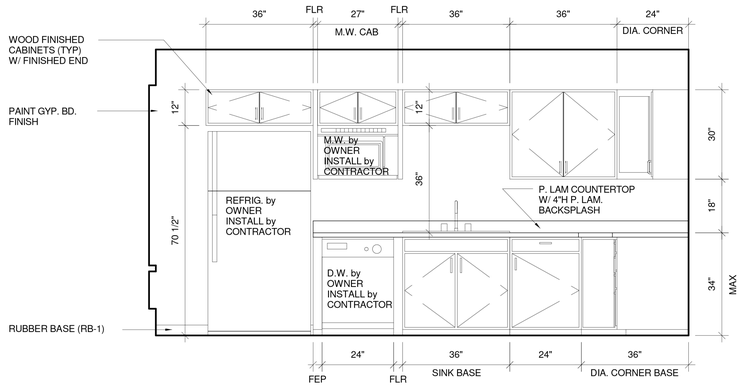

8 COMM. ROOM 203 -WEST

1/2" = 1'-0"

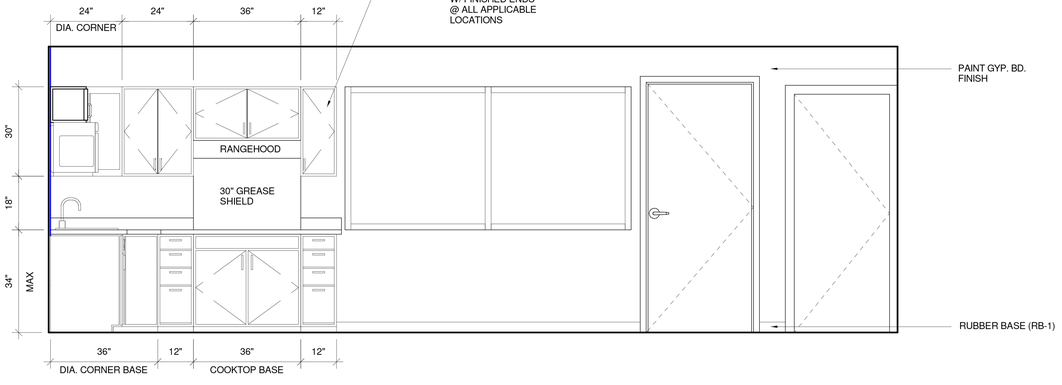

7 COMM. ROOM 203 -NORTH

1/2" = 1'-0"

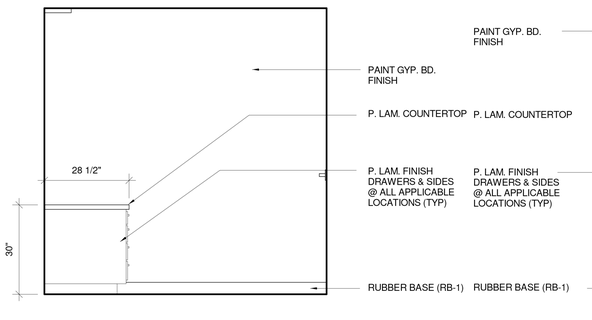

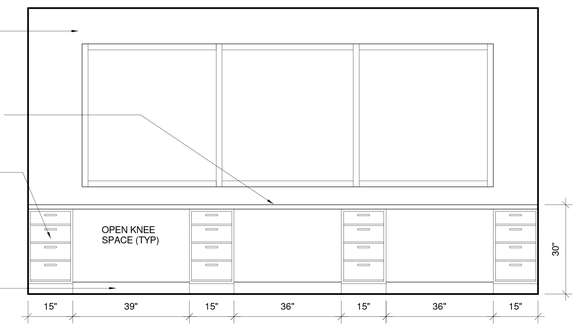

12 COMP. LAB 204 -SOUTH

1/2" = 1'-0"

11 COMP. LAB 204 -EAST

1/2" = 1'-0"

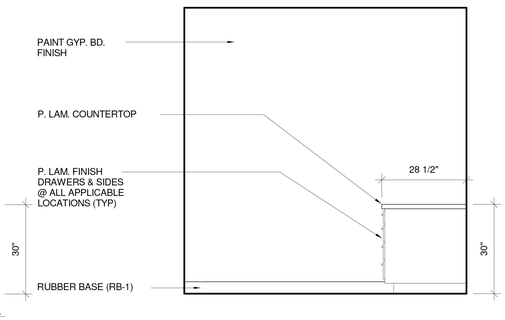

10 COMP. LAB 204 -NORTH

1/2" = 1'-0"

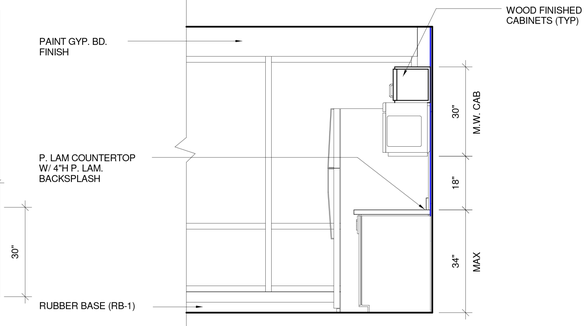

9 COMM. ROOM 203 -SOUTH

1/2" = 1'-0"

HGF ARCHITECTS INC.

STATE OF COLORADO
AMY G. HURTIG-SMITH
400418
LICENSED ARCHITECT

Lazarus Designs
719.360.3164
ron@lazarusdesignsllc.com
lazarusdesigns.blogspot.com

A SUPPORTIVE HOUSING FACILITY

THE RIGHT PLACE
CARDINAL CAPITAL MGMT.

PROJECT NUMBER:	2019.90
PHASE:	PERMIT SET
PHASE ISSUE DATE:	4-27-20
DESIGNED BY:	RBV/KV
SCALE:	1/2" = 1'-0"

INTERIOR ELEVATIONS

SHEET ISSUE DATE: 04/27/20

A6.1

AMENITY ROOM FINISH SCHEDULE

RM #	ROOM NAME	FLOOR FINISH	BASE FINISH	WALL FINISH				CEILING FINISH	CEILING NOTES	CASEWORK		SPECIALTIES	COMMENTS	RM #
				NORTH	EAST	SOUTH	WEST			CABINETS	C.-TOPS			
101	VESTIBULE	WOC-1	RB-1	PNT-2	PNT-2	PNT-2	PNT-2	PNT-5						101
102	LOBBY	PFT-1, KNT-1	RB-1	PNT-1 / PWT-1	PNT-1	PNT-2	PNT-2 / PWT-1	PNT-3 / PNT-5	PNT-3 @ C2.3 / PNT-5 @ C2.2		QSC-1	BENCHES	1. RE: REF. CLG. PLAN, 2. PWT @ FIREPLACE and COLUMNS	102
103	OFFICE	CPT-1	RB-1	PNT-1	PNT-2	PNT-1	PNT-1	EGC						103
104	OFFICE	CPT-1	RB-1	PNT-2	PNT-2	PNT-1	PNT-1	EGC						104
105	ELEVATOR LOBBY	PFT-1	RB-1		PNT-1	PNT-2	PNT-1 / PWT-1	EGC					PWT-1 @ ELEVATOR WALL W/ PNT-1 @ MACH. RM. WALLS (EXT. WALLS)	105
106	WEST CORRIDOR	KNT-1	RB-1	PNT-1	PNT-1	PNT-1	PNT-1	EGC / PNT-3	PNT-3 @ C2.3					106
107	RESTROOM	PFT-1	PTB-1	CWT-1	CWT-1	CWT-1	CWT-1	PNT-5		PL-2	QSC-1	TLT. ACCESSORIES		107
108	COMMONS	KNT-1	RB-1	PNT-1	PNT-1	PNT-2	PNT-1	EGC						108
109	STAIR 2	RSS-1	RB-2	PNT-1	PNT-1	PNT-1	PNT-1	RE: REF. CLG. PLAN						109
110	COMM. CLOSET	SLR-1	RB-1	PNT-1	PNT-1	PNT-1	PNT-1	PNT-5						110
111	BUILDING STORAGE	SLR-1	RB-1	PNT-1	PNT-1	PNT-1	PNT-1	PNT-5						111
112	BUILDING SERVICES	SLR-1	RB-2	PNT-1	PNT-1	PNT-1	PNT-1	PNT-5						112
113	JANITOR	SLR-1	RB-2	FRP-1	FRP-1	FRP-1	FRP-1	PNT-5						113
114	TENANT STORAGE	SLR-1	RB-1	PNT-1	PNT-1	PNT-1	PNT-1	PNT-5				LOCKERS		114
115	EAST CORRIDOR	KNT-1	RB-1	PNT-1	PNT-1	PNT-1	PNT-1	EGC / PNT-3	PNT-3 @ C2.3					115
116	STAIR 1	RSS-1	RB-2	PNT-1	PNT-1	PNT-1	PNT-1	RE: REF. CLG. PLAN						116
117	WATER ENTRY ROOM	SLR-1	RB-2	PNT-1	PNT-1	PNT-1	PNT-1	PNT-5						117
118	ELEV.	KNT-1	SEE COMMENTS	SEE COMMENTS				SEE COMMENTS					WALL, BASE & CLG. FINISH by ELEV. MANUF.	118
119	MACH. ROOM	SLR-1	RB-1	PNT-1	PNT-1	PNT-1	PNT-1							119
201	ELEVATOR LOBBY	PFT-1	RB-1	PNT-1	PNT-1	PNT-2	PWT-1	PNT-5						201
202	CENTRAL CORRIDOR	PFT-1, KNT-1	RB-1	PNT-1	PNT-1	PNT-1	PNT-1	EGC / PNT-3						202
203	COMMUNITY ROOM	LVT-1	RB-1	PNT-2 / CWT-2	PNT-2	PNT-2	PNT-2 / CWT-2	EGC		WOOD (PNT-4)	QSC-1		CWT-2 BACKSPLASH FULL HT. TO UPPER CABINETS @ COUNTERTOPS	203
204	COMPUTER LAB	KNT-1	RB-1	PNT-1	PNT-1	PNT-1	PNT-1	EGC			PL-1	UNDER CNTR BRACKETS		204
205	WEST CORRIDOR	KNT-1	RB-1	PNT-1	PNT-1	PNT-1	PNT-1	EGC / PNT-3						205
206	COMM. CLOSET	SLR-1	RB-1	PNT-1	PNT-1	PNT-1	PNT-1	PNT-5						206
207	BUILDING STORAGE	SLR-1	RB-1	PNT-1	PNT-1	PNT-1	PNT-1	PNT-5						207
208	EAST CORRIDOR	KNT-1, WOC-1	RB-1	PNT-1	PNT-1	PNT-1	PNT-1	EGC / PNT-3						208
209	LAUNDRY	PFT-1	RB-1	PNT-1	PNT-1	PNT-1	PNT-1	PNT-5			PL-1	UNDER CNTR BRACKETS		209
210	EXTERIOR PATIO	SEE COMMENTS											RE: ARCHITECTURAL PLANS and SPEC'S FOR EXTERIOR FINISHES	210
301	ELEVATOR LOBBY	PFT-1	RB-1	PNT-1	PNT-1	PNT-2	PWT-1	PNT-5						301
302	CENTRAL CORRIDOR	KNT-1	RB-1	PNT-1	PNT-1	PNT-1	PNT-1	EGC / PNT-3						302
303	LIBRARY / BUS. CENTER	KNT-1	RB-1	PNT-2	PNT-2	PNT-2	PNT-2	EGC						303
304	COMPUTER LAB	KNT-1	RB-1	PNT-1	PNT-1	PNT-1	PNT-1	EGC			PL-1	UNDER CNTR BRACKETS		304
305	WEST CORRIDOR	KNT-1	RB-1	PNT-1	PNT-1	PNT-1	PNT-1	EGC / PNT-3						305
306	TRASH DISPOSAL	SLR-1	RB-2	PNT-1	PNT-1	PNT-1	PNT-1	PNT-5						306
307	BUILDING STORAGE	SLR-1	RB-1	PNT-1	PNT-1	PNT-1	PNT-1	PNT-5						307
308	EAST CORRIDOR	KNT-1	RB-1	PNT-1	PNT-1	PNT-1	PNT-1	EGC / PNT-3						308
309	LAUNDRY	PFT-1	RB-1	PNT-1	PNT-1	PNT-1	PNT-1	PNT-5			PL-1	UNDER CNTR BRACKETS		309

UNIT ROOM FINISH SCHEDULE

RM #	ROOM NAME	FLOOR FINISH	BASE FINISH	WALL FINISH				CEILING FINISH	CEILING NOTES	CASEWORK		SPECIALTIES	COMMENTS	RM #
				NORTH	EAST	SOUTH	WEST			CABINETS	COUNTERTOPS			
U-101	UNIT 1 (B)	LVT-2	WD-1	PNT-1	PNT-1	PNT-1	PNT-1	PNT-5	RE: UNIT RCP SHEET A2.8	WOOD (PNT-4)	PL-1	RE: RM FINISH NOTES 1	RE: TYP. UNIT ROOM FINISH SCHEDULE	U-101
U-102	UNIT 2 (A)	LVT-2	WD-1	PNT-1	PNT-1	PNT-1	PNT-1	PNT-5	RE: UNIT RCP SHEET A2.8	WOOD (PNT-4)	PL-1	RE: RM FINISH NOTES 2	RE: TYP. UNIT ROOM FINISH SCHEDULE	U-102
U-103	UNIT 3 (B)	LVT-2	WD-1	PNT-1	PNT-1	PNT-1	PNT-1	PNT-5	RE: UNIT RCP SHEET A2.8	WOOD (PNT-4)	PL-1	RE: RM FINISH NOTES 1	RE: TYP. UNIT ROOM FINISH SCHEDULE	U-103
U-104	UNIT 4 (B)	LVT-2	WD-1	PNT-1	PNT-1	PNT-1	PNT-1	PNT-5	RE: UNIT RCP SHEET A2.8	WOOD (PNT-4)	PL-1	RE: RM FINISH NOTES 1	RE: TYP. UNIT ROOM FINISH SCHEDULE	U-104
U-107	UNIT 5 (B)	LVT-2	WD-1	PNT-1	PNT-1	PNT-1	PNT-1	PNT-5	RE: UNIT RCP SHEET A2.8	WOOD (PNT-4)	PL-1	RE: RM FINISH NOTES 1	RE: TYP. UNIT ROOM FINISH SCHEDULE	U-107
U-108	UNIT 6 (B)	LVT-2	WD-1	PNT-1	PNT-1	PNT-1	PNT-1	PNT-5	RE: UNIT RCP SHEET A2.8	WOOD (PNT-4)	PL-1	RE: RM FINISH NOTES 1	RE: TYP. UNIT ROOM FINISH SCHEDULE	U-108
U-109	UNIT 7 (B)	LVT-2	WD-1	PNT-1	PNT-1	PNT-1	PNT-1	PNT-5	RE: UNIT RCP SHEET A2.8	WOOD (PNT-4)	PL-1	RE: RM FINISH NOTES 1	RE: TYP. UNIT ROOM FINISH SCHEDULE	U-109
U-110	UNIT 8 (B)	LVT-2	WD-1	PNT-1	PNT-1	PNT-1	PNT-1	PNT-5	RE: UNIT RCP SHEET A2.8	WOOD (PNT-4)	PL-1	RE: RM FINISH NOTES 1	RE: TYP. UNIT ROOM FINISH SCHEDULE	U-110
U-111	UNIT 9 (B)	LVT-2	WD-1	PNT-1	PNT-1	PNT-1	PNT-1	PNT-5	RE: UNIT RCP SHEET A2.8	WOOD (PNT-4)	PL-1	RE: RM FINISH NOTES 1	RE: TYP. UNIT ROOM FINISH SCHEDULE	U-111
U-112	UNIT 10 (B)	LVT-2	WD-1	PNT-1	PNT-1	PNT-1	PNT-1	PNT-5	RE: UNIT RCP SHEET A2.8	WOOD (PNT-4)	PL-1	RE: RM FINISH NOTES 1	RE: TYP. UNIT ROOM FINISH SCHEDULE	U-112
U-113	UNIT 11 (A)	LVT-2	WD-1	PNT-1	PNT-1	PNT-1	PNT-1	PNT-5	RE: UNIT RCP SHEET A2.8	WOOD (PNT-4)	PL-1	RE: RM FINISH NOTES 2	RE: TYP. UNIT ROOM FINISH SCHEDULE	U-113
U-201	UNIT 12 (B)	LVT-2	WD-1	PNT-1	PNT-1	PNT-1	PNT-1	PNT-5	RE: UNIT RCP SHEET A2.8	WOOD (PNT-4)	PL-1	RE: RM FINISH NOTES 1	RE: TYP. UNIT ROOM FINISH SCHEDULE	U-201
U-202	UNIT 13 (B)	LVT-2	WD-1	PNT-1	PNT-1	PNT-1	PNT-1	PNT-5	RE: UNIT RCP SHEET A2.8	WOOD (PNT-4)	PL-1	RE: RM FINISH NOTES 1	RE: TYP. UNIT ROOM FINISH SCHEDULE	U-202
U-203	UNIT 14 (B)	LVT-2	WD-1	PNT-1	PNT-1	PNT-1	PNT-1	PNT-5	RE: UNIT RCP SHEET A2.8	WOOD (PNT-4)	PL-1	RE: RM FINISH NOTES 1	RE: TYP. UNIT ROOM FINISH SCHEDULE	U-203
U-204	UNIT 15 (B)	LVT-2	WD-1	PNT-1	PNT-1	PNT-1	PNT-1	PNT-5	RE: UNIT RCP SHEET A2.8	WOOD (PNT-4)	PL-1	RE: RM FINISH NOTES 1	RE: TYP. UNIT ROOM FINISH SCHEDULE	U-204
U-205	UNIT 16 (B)	LVT-2	WD-1	PNT-1	PNT-1	PNT-1	PNT-1	PNT-5	RE: UNIT RCP SHEET A2.8	WOOD (PNT-4)	PL-1	RE: RM FINISH NOTES 1	RE: TYP. UNIT ROOM FINISH SCHEDULE	U-205
U-206	UNIT 17 (B)	LVT-2	WD-1	PNT-1	PNT-1	PNT-1	PNT-1	PNT-5	RE: UNIT RCP SHEET A2.8	WOOD (PNT-4)	PL-1	RE: RM FINISH NOTES 1	RE: TYP. UNIT ROOM FINISH SCHEDULE	U-206
U-207	UNIT 18 (B)	LVT-2	WD-1	PNT-1	PNT-1	PNT-1	PNT-1	PNT-5	RE: UNIT RCP SHEET A2.8	WOOD (PNT-4)	PL-1	RE: RM FINISH NOTES 1	RE: TYP. UNIT ROOM FINISH SCHEDULE	U-207
U-208	UNIT 19 (B)	LVT-2	WD-1	PNT-1	PNT-1	PNT-1	PNT-1	PNT-5	RE: UNIT RCP SHEET A2.8	WOOD (PNT-4)	PL-1	RE: RM FINISH NOTES 1	RE: TYP. UNIT ROOM FINISH SCHEDULE	U-208
U-209	UNIT 20 (B)	LVT-2	WD-1	PNT-1	PNT-1	PNT-1	PNT-1	PNT-5	RE: UNIT RCP SHEET A2.8	WOOD (PNT-4)	PL-1	RE: RM FINISH NOTES 1	RE: TYP. UNIT ROOM FINISH SCHEDULE	U-209
U-210	UNIT 21 (B)	LVT-2	WD-1	PNT-1	PNT-1	PNT-1	PNT-1	PNT-5	RE: UNIT RCP SHEET A2.8	WOOD (PNT-4)	PL-1	RE: RM FINISH NOTES 1	RE: TYP. UNIT ROOM FINISH SCHEDULE	U-210
U-211	UNIT 22 (B)	LVT-2	WD-1	PNT-1	PNT-1	PNT-1	PNT-1	PNT-5	RE: UNIT RCP SHEET A2.8	WOOD (PNT-4)	PL-1	RE: RM FINISH NOTES 1	RE: TYP. UNIT ROOM FINISH SCHEDULE	U-211
U-213	UNIT 23 (A)	LVT-2	WD-1	PNT-1	PNT-1	PNT-1	PNT-1	PNT-5	RE: UNIT RCP SHEET A2.8	WOOD (PNT-4)	PL-1	RE: RM FINISH NOTES 2	RE: TYP. UNIT ROOM FINISH SCHEDULE	U-213
U-301	UNIT 24 (B)	LVT-2	WD-1	PNT-1	PNT-1	PNT-1	PNT-1	PNT-5	RE: UNIT RCP SHEET A2.8	WOOD (PNT-4)	PL-1	RE: RM FINISH NOTES 1	RE: TYP. UNIT ROOM FINISH SCHEDULE	U-301
U-302	UNIT 25 (B)	LVT-2	WD-1	PNT-1	PNT-1	PNT-1	PNT-1	PNT-5	RE: UNIT RCP SHEET A2.8	WOOD (PNT-4)	PL-1	RE: RM FINISH NOTES 1	RE: TYP. UNIT ROOM FINISH SCHEDULE	U-302
U-303	UNIT 26 (B)	LVT-2	WD-1	PNT-1	PNT-1	PNT-1	PNT-1	PNT-5	RE: UNIT RCP SHEET A2.8	WOOD (PNT-4)	PL-1	RE: RM FINISH NOTES 1	RE: TYP. UNIT ROOM FINISH SCHEDULE	U-303
U-304	UNIT 27 (B)	LVT-2	WD-1	PNT-1	PNT-1	PNT-1	PNT-1	PNT-5	RE: UNIT RCP SHEET A2.8	WOOD (PNT-4)	PL-1	RE: RM FINISH NOTES 1	RE: TYP. UNIT ROOM FINISH SCHEDULE	U-304
U-305	UNIT 28 (B)	LVT-2	WD-1	PNT-1	PNT-1	PNT-1	PNT-1	PNT-5	RE: UNIT RCP SHEET A2.8	WOOD (PNT-4)	PL-1	RE: RM FINISH NOTES 1	RE: TYP. UNIT ROOM FINISH SCHEDULE	U-305
U-306	UNIT 29 (B)	LVT-2	WD-1	PNT-1	PNT-1	PNT-1	PNT-1	PNT-5	RE: UNIT RCP SHEET A2.8	WOOD (PNT-4)	PL-1	RE: RM FINISH NOTES 1	RE: TYP. UNIT ROOM FINISH SCHEDULE	U-306
U-307	UNIT 30 (B)	LVT-2	WD-1	PNT-1	PNT-1	PNT-1	PNT-1	PNT-5	RE: UNIT RCP SHEET A2.8	WOOD (PNT-4)	PL-1	RE: RM FINISH NOTES 1	RE: TYP. UNIT ROOM FINISH SCHEDULE	U-307
U-308	UNIT 31 (B)	LVT-2	WD-1	PNT-1	PNT-1	PNT-1	PNT-1	PNT-5	RE: UNIT RCP SHEET A2.8	WOOD (PNT-4)	PL-1	RE: RM FINISH NOTES 1	RE: TYP. UNIT ROOM FINISH SCHEDULE	U-308
U-309	UNIT 32 (B)	LVT-2	WD-1	PNT-1	PNT-1	PNT-1	PNT-1	PNT-5	RE: UNIT RCP SHEET A2.8	WOOD (PNT-4)	PL-1	RE: RM FINISH NOTES 1	RE: TYP. UNIT ROOM FINISH SCHEDULE	U-309
U-310	UNIT 33 (B)	LVT-2	WD-1	PNT-1	PNT-1	PNT-1	PNT-1	PNT-5	RE: UNIT RCP SHEET A2.8	WOOD (PNT-4)	PL-1	RE: RM FINISH NOTES 1	RE: TYP. UNIT ROOM FINISH SCHEDULE	U-310
U-311	UNIT 34 (B)	LVT-2	WD-1	PNT-1	PNT-1	PNT-1	PNT-1	PNT-5	RE: UNIT RCP SHEET A2.8	WOOD (PNT-4)	PL-1	RE: RM FINISH NOTES 1	RE: TYP. UNIT ROOM FINISH SCHEDULE	U-311
U-313	UNIT 35 (B)	LVT-2	WD-1	PNT-1	PNT-1	PNT-1	PNT-1	PNT-5	RE: UNIT RCP SHEET A2.8	WOOD (PNT-4)	PL-1	RE: RM FINISH NOTES 1	RE: TYP. UNIT ROOM FINISH SCHEDULE	U-313

ROOM FINISH NOTES:

GENERAL NOTES:
ALL FLOORING, FINISH WOOD, PAINT and STAIN, CASEWORK/PLYWOOD SHALL MEET GREEN COMMUNITIES CRITERIA.
FLOORING SHALL BE INSTALLED UNDER REMOVABLE BASE CABINETS IN ALL UNITS
INTERIOR SIDE of ALL WINDOWS SHALL HAVE QUARTZ SURFACE SILLS and WINDOW BLINDS
FINISHED CABINET ENDS AT ALL APPLICABLE LOCATIONS

FLOORS:

SEALER:
SLR-1: SEALER ON CONC. by APPROVED MANUF.

RUBBER STAIR SYSTEM:
RSS-1: JOHNSONITE RUBBER STAIR TREADS, RISERS, AND LANDINGS, PATTERN: BAMBOO, COLOR as SELECTED by ARCHITECT

CARPET:
NOTE: ALL CARPET and CARPET ADHESIVES to MEET CARPET and RUG INSTITUTE'S GREEN LABEL or GREEN LABEL PLUS CERTIFICATION.
CPT-1: SHAW CONTRACT, 24" x 24" TILE, PATTERN: SCULPT LOOP TILE, COLOR: UNDERGROUND 83505

WALK-OFF CARPET TILE (VESTIBULE FLOOR MATERIAL):
WOC-1: J & J INDUSTRIES, 24" x 24" TILE, PATTERN: INCOGNITO, COLOR: to be SELECTED FROM MANUFACTURER'S FULL COLOR RANGE

KINETEX:
KNT-1: J & J FLOORING, PATTERN: BROOKSTONE, COLOR as SELECTED BY ARCHITECT

PORCELAIN FLOOR TILE:
NOTE: ALL TILE FLOORING SHALL MEET SCIENTIFIC CERTIFICATION SYSTEM'S FLOORSCORE PROGRAM CRITERIA
PFT-1: PORCELAIN FLOOR TILE (PFT) by DAL-TILE, PATTERN and COLOR: as SELECTED by ARCHITECT

LUXURY VINYL TILE:
NOTE: ALL VINYL FLOORING SHALL MEET SCIENTIFIC CERTIFICATION SYSTEM'S FLOORSCORE PROGRAM CRITERIA
LVT-1: LUXURY VINYL TILE (LVT) by KARNDEAN, 36" x 6", PATTERN and COLOR: KNIGHT WOOD PLANK, AGED OAK KP98 (to BE INSTALLED OVER "ULTRAPLY" PREMIUM UNDERLAYMENT by MORELAND CO.)
LVT-2: LUXURY VINYL TILE (LVT) by KARNDEAN, 36" x 4", PATTERN and COLOR: KNIGHT WOOD PLANK, WALNUT KP36 (to BE INSTALLED OVER "ULTRAPLY" PREMIUM UNDERLAYMENT by MORELAND CO.)

BASE:
RB-1: RUBBER BASE (RB) by TARKETT, 4"H. COVED TOE, COLOR: as SELECTED by ARCHITECT
RB-2: RUBBER BASE (RB) by TARKETT, 6"H., COVED TOE, COLOR: as SELECTED by ARCHITECT
WD-1: WOOD BASE (WD), TRIMCO MILLWORK 444, 9/16" x 3 1/4" PAINT with PNT-1: SHERWIN WILLIAMS, COLOR: SW7008 ALABASTER, SEMI-GLOSS FINISH
PTB-1: PORCELAIN TILE BASE, by DAL-TILE, PATTERN/COLOR: as SELECTED by ARCHITECT, 6" x 12" COVE BASE

WALLS:
PAINT:
NOTE: ALL PAINT SHALL be LOW/NO VOC
PNT-1: FIELD PAINT by SHERWIN WILLIAMS, COLOR: SW7008 ALABASTER, EG-SHEL FINISH
PNT-2: ACCENT PAINT by SHERWIN WILLIAMS, COLOR: to be SELECTED FROM MANUFACTURER'S TOTAL COLOR RANGE.
PNT-3: ACCENT PAINT by SHERWIN WILLIAMS, COLOR: as SELECTED by ARCHITECT, EG-SHEL FINISH

PORCELAIN / CERAMIC WALL TILE:
PWT-1: FIELD TILE by DAL-TILE, PATTERN and COLOR: to be SELECTED FROM MANUFACTURER'S TOTAL COLOR RANGE.
PWT-2: WALL TILE by DAL-TILE, PATTERN and COLOR:
CWT-1: WALL TILE by DAL-TILE, 6" x 16", PATTERN: ANNAPOLIS, COLOR: as SELECTED by ARCHITECT
CWT-2: ACCENT TILE by DAL-TILE, MOSAIC, PATTERN: OPULENCE, COLOR: as SELECTED by ARCHITECT

FIBERGLASS REINFORCED PLASTIC:
FRP-1: PANELS by APPROVED MANUF., PATTERN and COLOR: to be SELECTED FROM MANUFACTURER'S STANDARD COLOR RANGE.
CEILINGS:

PAINT:
PNT-3: ACCENT SOFFIT PAINT by SHERWIN WILLIAMS, COLOR: as SELECTED by ARCHITECT, EG-SHEL FINISH

PNT-5: SHERWIN WILLIAMS, COLOR: SW7005 PURE WHITE, EG-SHEL FINISH

CASEWORK:
CABINETS:
WOOD BASE and WALL CABINETS, LOW/NO FORMALDEYHYDE PLYWOOD, LOW-VOC PAINT (PNT-4)
PNT-4: WOOD CABINET PAINT by SHERWIN WILLIAMS, COLOR: SW7030 ANEW GRAY
COUNTERTOPS:

PLASTIC LAMINATE:
PL-1: PLASTIC LAMINATE by FORMICA, PATTERN / COLOR: 3450-RD MINERAL JET, RADIANCE FINISH

QUARTZ SURFACING COUNTERTOPS:
QSC-1: QUARTZ SURFACING and COUNTERTOPS by CAESARSTONE, PATTERN and COLOR: as SELECTED by ARCHITECT
PROTECTION PANELS:
PL-2: PLASTIC LAMINATE by APPROVED MANUF., PATTERN / COLOR: as SELECTED by ARCHITECT

ROOM FINISH NOTES:
1. **SPECIALTIES:** TOWEL BAR(S), TOWEL RING, RECESSED MEDICINE CABINET, MIRROR, TOILET PAPER HOLDER, SHOWER CURTAIN ROD
2. **SPECIALTIES:** GRAB BARS, TOWEL BAR(S), RECESSED MEDICINE CABINET, MIRROR, TOILET PAPER HOLDER, SHOWER CURTAIN ROD, TOWEL RING

CLOSET NOTES
BEDROOM CLOSETS: INSTALL (1) 3/4" HARDBOARD SHELF with CONTINUOUS 3/4" HARDBOARD BLOCKING ABOVE 1 5/16" WOOD DOWEL ROD ON POLE SOCKETS. PAINT ALL HARDBOARD SHELVES and BLOCKING (PNT-1)
COAT CLOSETS: INSTALL (1) 3/4" HARDBOARD SHELF with CONTINUOUS 3/4" HARDBOARD BLOCKING ABOVE 1 5/16" WOOD DOWEL ROD ON POLE SOCKETS. PAINT ALL HARDBOARD SHELVES and BLOCKING (PNT-1) BATHROOM CLOSETS: INSTALL (3) 3/4" HARDBOARD SHELVES with CONTINUOUS 3/4" HARDBOARD BLOCKING

HGF ARCHITECTS INC.

STATE OF COLORADO
AMY G. HURTIG-SMITH
400418
LICENSED ARCHITECT

Lazarus Designs
719.360.3164
ron@lazarusdesignsllc.com
lazarusdesigns.blogspot.com

PROJECT NUMBER:	2019.90
PHASE:	PERMIT SET
PHASE ISSUE DATE:	4-27-20
DESIGNED BY:	RBV/KV
SCALE:	11/2" = 1'-0"

ROOM FINISH SCHEDULE

SHEET ISSUE DATE: 04/27/20

A6.2

THE RIGHT PLACE
CARDINAL CAPITAL MGMT.
A SUPPORTIVE HOUSING FACILITY

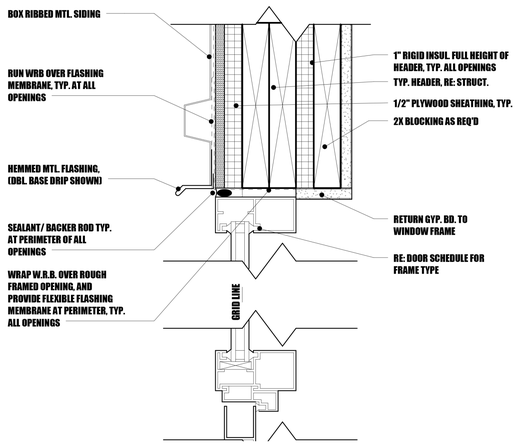

4 ALUM. DOOR HEAD-MTL.
3" = 1'-0"

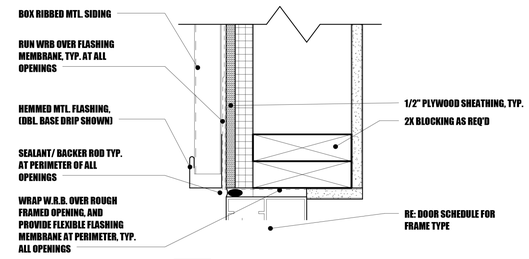

5 ALUM. DOOR JAMB-MTL.
3" = 1'-0"

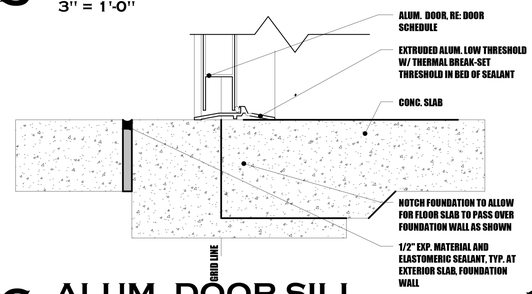

6 ALUM. DOOR SILL
3" = 1'-0"

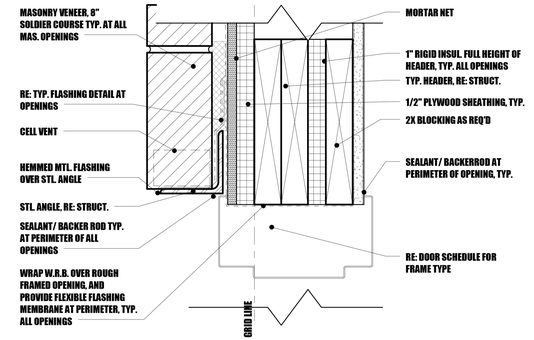

1 H.M. DOOR HEAD-MASONRY
3" = 1'-0"

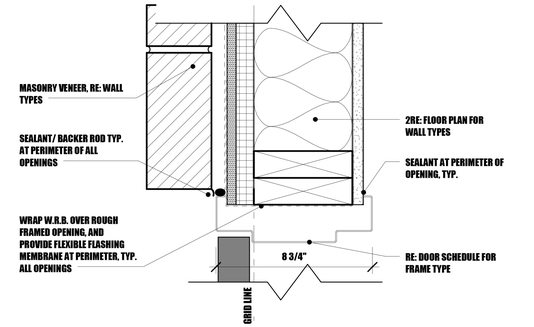

2 H.M. DOOR JAMB-MASONRY
3" = 1'-0"

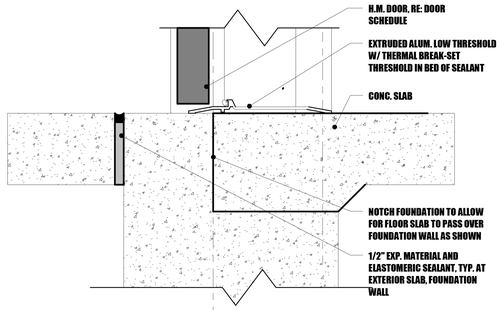

3 DOOR SILL 1-EXTERIOR
3" = 1'-0"

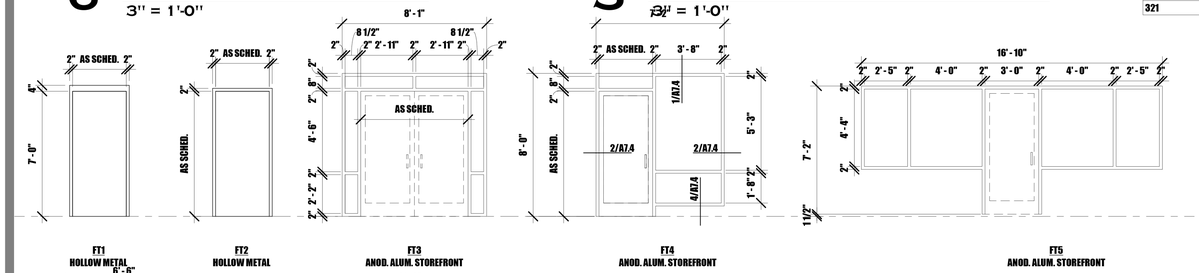

DOOR FRAME TYPES
1/4"= 1'-0"

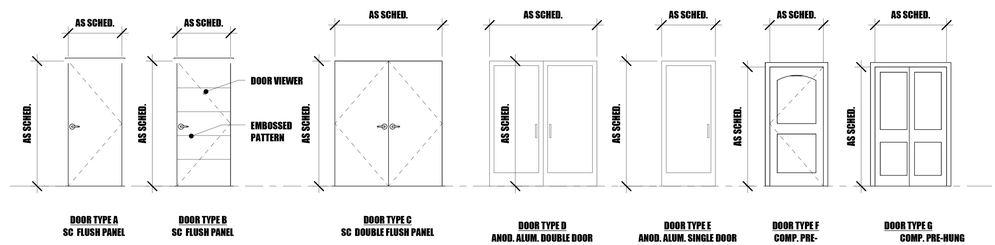

DOOR TYPES
1/4"= 1'-0"

DOOR SCHEDULE-BUILDING

DOOR NUMBER	DOOR TYPE	Door WIDTH	Door HEIGHT	Door THICK.	Door MAT.	Door FIN.	RATING	HARDWARE	Frame FRAME TYPE	Frame FRAME MAT.	Frame FRAME FIN.	Frame JAMB DETAIL	Frame HEAD DETAIL	COMMENTS	Description
101	101	6' - 0"	7' - 0"	2"	ALUM.	F.F.	NOT REQ'D.	TBD	FT3	ALUM.	FF	5/7.1	4/A7.1		
102	101	6' - 0"	7' - 0"	2"	ALUM.	F.F.	NOT REQ'D.	TBD	FT3	ALUM.	FF	5/A7.1	4/A7.2		
104	A	3' - 0"	7' - 0"	13/4"	HM	PT	20	TBD	FT6	HM	PT	1/A7.2	1/A7.2		
105	A	3' - 0"	7' - 0"	13/4"	HM	PT	20	TBD	FT2	HM	PT	1/A7.2	1/A7.2		
106	B	3' - 0"	7' - 0"	13/4"	HM	PT	20	TBD	FT2	HM	PT	5/A7.2	5/A7.2		UNIT ENTRY DOOR
107	B	3' - 0"	7' - 0"	13/4"	HM	PT	20	TBD	FT2	HM	PT	5/A7.2	5/A7.2		UNIT ENTRY DOOR
108	A	3' - 0"	7' - 0"	13/4"	HM	PT	45	TBD	FT2	HM	PT	3/A7.2	2/A7.2		
109	A	3' - 0"	7' - 0"	13/4"	HM	PT	NOT REQ'D.	TBD	FT1	HM	PT	2/A7.1	1/A7.1		
110	A	3' - 0"	7' - 0"	13/4"	HM	PT	20	TBD	FT2	HM	PT	1/A7.2	1/A7.2		
111	A	3' - 0"	7' - 0"	13/4"	HM	PT	20	TBD	FT2	HM	PT	1/A7.2	1/A7.2		
112	A	3' - 0"	7' - 0"	13/4"	HM	PT	20	TBD	FT2	HM	PT	1/A7.2	1/A7.2		
114	A	3' - 0"	7' - 0"	13/4"	HM	PT	20	TBD	FT2	HM	PT	1/A7.2	1/A7.2		
115	B	3' - 0"	7' - 0"	13/4"	HM	PT	20	TBD	FT2	HM	PT	5/A7.2	5/A7.2		UNIT ENTRY DOOR
116	B	3' - 0"	7' - 0"	13/4"	HM	PT	20	TBD	FT2	HM	PT	5/A7.2	5/A7.2		UNIT ENTRY DOOR
117	A	3' - 0"	7' - 0"	13/4"	HM	PT	20	TBD	FT2	HM	PT	1/A7.2	1/A7.2		
118	A	3' - 0"	7' - 0"	13/4"	HM	PT	20	TBD	FT7	HM	PT	1/A7.2	1/A7.2		
119	B	3' - 0"	7' - 0"	13/4"	HM	PT	20	TBD	FT2	HM	PT	5/A7.2	5/A7.2		UNIT ENTRY DOOR
120	B	3' - 0"	7' - 0"	13/4"	HM	PT	20	TBD	FT2	HM	PT	5/A7.2	5/A7.2		UNIT ENTRY DOOR
121	B	3' - 0"	7' - 0"	13/4"	HM	PT	20	TBD	FT2	HM	PT	5/A7.2	5/A7.2		UNIT ENTRY DOOR
122	B	3' - 0"	7' - 0"	13/4"	HM	PT	20	TBD	FT2	HM	PT	5/A7.2	5/A7.2		UNIT ENTRY DOOR
123	A	3' - 0"	7' - 0"	13/4"	HM	PT	45	TBD	FT2	HM	PT	3/A7.2	2/A7.2		
124	A	3' - 0"	7' - 0"	13/4"	HM	PT	NOT REQ'D.	TBD	F1	HM	PT	2/A7.1	1/A7.1		
125	A	3' - 0"	7' - 0"	13/4"	HM	PT	NOT REQ'D.	TBD	FT1	HM	PT	2/A7.1	1/A7.1		
126	A	3' - 0"	7' - 0"	13/4"	HM	PT	20	TBD	FT1	HM	PT	1/A7.2	1/A7.2		
127	B	3' - 0"	7' - 0"	13/4"	HM	PT	20	TBD	FT2	HM	PT	5/A7.2	5/A7.2		UNIT ENTRY DOOR
128	B	3' - 0"	7' - 0"	13/4"	HM	PT	20	TBD	FT2	HM	PT	5/A7.2	5/A7.2		UNIT ENTRY DOOR
129	B	3' - 0"	7' - 0"	13/4"	HM	PT	20	TBD	FT2	HM	PT	5/A7.2	5/A7.2		UNIT ENTRY DOOR
131	A	3' - 0"	7' - 0"	13/4"	HM	PT	20	TBD	FT2	HM	PT	1/A7.2	1/A7.2		
131A	A	3' - 0"	7' - 0"	13/4"	HM	PT	45	TBD	FT2	HM	PT	3/A7.2	2/A7.2		
132	E	3' - 0"	7' - 0"	2"	ALUM.	F.F.	NOT REQ'D.	TBD	FT4	ALUM.	FF	5/7.1	4/A7.1		
201	A	4' - 0"	7' - 0"	13/4"	HM	PT	45	TBD	FT2	HM	PT	1/A7.2	1/A7.2		
202	A	3' - 0"	7' - 0"	13/4"	HM	PT	20	TBD	FT6	HM	PT	1/A7.2	1/A7.2		
202A	A	2' - 8"	7' - 0"	13/4"	HM	PT	NOT REQ'D.	TBD	FT2	HM	PT	1/A7.2	1/A7.2		
203	A	3' - 0"	7' - 0"	13/4"	HM	PT	NOT REQ'D.	TBD	FT6	HM	PT	1/A7.2	1/A7.2		
204	B	3' - 0"	7' - 0"	13/4"	HM	PT	20	TBD	FT2	HM	PT	5/A7.2	5/A7.2		UNIT ENTRY DOOR
205	B	3' - 0"	7' - 0"	13/4"	HM	PT	20	TBD	FT2	HM	PT	5/A7.2	5/A7.2		UNIT ENTRY DOOR
206	B	3' - 0"	7' - 0"	13/4"	HM	PT	20	TBD	FT2	HM	PT	5/A7.2	5/A7.2		UNIT ENTRY DOOR
207	A	3' - 0"	7' - 0"	13/4"	HM	PT	45	TBD	FT1	HM	PT	3/A7.2	2/A7.2		
208	A	3' - 0"	7' - 0"	13/4"	HM	PT	20	TBD	FT2	HM	PT	1/A7.2	1/A7.2		
209	B	3' - 0"	7' - 0"	13/4"	HM	PT	20	TBD	FT2	HM	PT	5/A7.2	5/A7.2		UNIT ENTRY DOOR
210	B	3' - 0"	7' - 0"	13/4"	HM	PT	20	TBD	FT2	HM	PT	5/A7.2	5/A7.2		UNIT ENTRY DOOR
211	B	3' - 0"	7' - 0"	13/4"	HM	PT	20	TBD	FT2	HM	PT	5/A7.2	5/A7.2		UNIT ENTRY DOOR
212	B	3' - 0"	7' - 0"	13/4"	HM	PT	20	TBD	FT2	HM	PT	5/A7.2	5/A7.2		UNIT ENTRY DOOR
213	B	3' - 0"	7' - 0"	13/4"	HM	PT	20	TBD	FT2	HM	PT	5/A7.2	5/A7.2		UNIT ENTRY DOOR
214	B	3' - 0"	7' - 0"	13/4"	HM	PT	20	TBD	FT2	HM	PT	5/A7.2	5/A7.2		UNIT ENTRY DOOR
215	B	3' - 0"	7' - 0"	13/4"	HM	PT	20	TBD	FT2	HM	PT	5/A7.2	5/A7.2		UNIT ENTRY DOOR
217	A	3' - 0"	7' - 0"	13/4"	HM	PT	45	TBD	FT1	HM	PT	3/A7.2	2/A7.2		
218	A	3' - 0"	7' - 0"	13/4"	HM	PT	45	TBD	FT1	PT	PT	1/A7.2	1/A7.2		
219	E	3' - 0"	7' - 0"	2"	ALUM.	F.F.	NOT REQ'D.	TBD	FT5	ALUM.	FF	5/A7.1	4/A7.1		
220	B	3' - 0"	7' - 0"	13/4"	HM	PT	20	TBD	FT2	HM	PT	5/A7.2	5/A7.2		UNIT ENTRY DOOR
221	B	3' - 0"	7' - 0"	13/4"	HM	PT	20	TBD	FT2	HM	PT	5/A7.2	5/A7.2		UNIT ENTRY DOOR
222	A	3' - 0"	7' - 0"	13/4"	HM	PT	20	TBD	FT2	HM	PT	1/A7.2	1/A7.2		
301	A	4' - 0"	7' - 0"	13/4"	HM	PT	45	TBD	FT2	HM	PT	1/A7.2	1/A7.2		
302	A	3' - 0"	7' - 0"	13/4"	HM	PT	20	TBD	FT6	HM	PT	1/A7.2	1/A7.2		
302A	A	2' - 8"	7' - 0"	13/4"	HM	PT	NOT REQ'D.	TBD	FT2	HM	PT	1/A7.2	1/A7.2		
303	A	3' - 0"	7' - 0"	13/4"	HM	PT	NOT REQ'D.	TBD	FT6	HM	PT	1/A7.2	1/A7.2		
304	B	3' - 0"	7' - 0"	13/4"	HM	PT	20	TBD	FT2	HM	PT	5/A7.2	5/A7.2		UNIT ENTRY DOOR
305	B	3' - 0"	7' - 0"	13/4"	HM	PT	20	TBD	FT2	HM	PT	5/A7.2	5/A7.2		UNIT ENTRY DOOR
306	B	3' - 0"	7' - 0"	13/4"	HM	PT	20	TBD	FT2	HM	PT	5/A7.2	5/A7.2		UNIT ENTRY DOOR
307	A	3' - 0"	7' - 0"	13/4"	HM	PT	45	TBD	FT1	HM	PT	3/A7.2	2/A7.2		
308	A	3' - 0"	7' - 0"	13/4"	HM	PT	20	TBD	FT2	HM	PT	1/A7.2	1/A7.2		
309	B	3' - 0"	7' - 0"	13/4"	HM	PT	20	TBD	FT2	HM	PT	5/A7.2	5/A7.2		UNIT ENTRY DOOR
310	B	3' - 0"	7' - 0"	13/4"	HM	PT	20	TBD	FT2	HM	PT	5/A7.2	5/A7.2		UNIT ENTRY DOOR
311	B	3' - 0"	7' - 0"	13/4"	HM	PT	20	TBD	FT2	HM	PT	5/A7.2	5/A7.2		UNIT ENTRY DOOR
312	B	3' - 0"	7' - 0"	13/4"	HM	PT	20	TBD	FT2	HM	PT	5/A7.2	5/A7.2		UNIT ENTRY DOOR
313	B	3' - 0"	7' - 0"	13/4"	HM	PT	20	TBD	FT2	HM	PT	5/A7.2	5/A7.2		UNIT ENTRY DOOR
314	B	3' - 0"	7' - 0"	13/4"	HM	PT	20	TBD	FT2	HM	PT	5/A7.2	5/A7.2		UNIT ENTRY DOOR
315	B	3' - 0"	7' - 0"	13/4"	HM	PT	20	TBD	FT2	HM	PT	5/A7.2	5/A7.2		UNIT ENTRY DOOR
317	A	3' - 0"	7' - 0"	13/4"	HM	PT	45	TBD	FT1	HM	PT	3/A7.2	2/A7.2		
318	A	3' - 0"	7' - 0"	13/4"	HM	PT	20	TBD	FT2	HM	PT	1/A7.2	1/A7.2		
319	A	3' - 0"	7' - 0"	13/4"	HM	PT	20	TBD	FT2	HM	PT	1/A7.2	1/A7.2		
320	B	3' - 0"	7' - 0"	13/4"	HM	PT	20	TBD	FT2	HM	PT	5/A7.2	5/A7.2		UNIT ENTRY DOOR
321	B	3' - 0"	7' - 0"	13/4"	HM	PT	20	TBD	FT2	HM	PT	5/A7.2	5/A7.2		UNIT ENTRY DOOR

HGF ARCHITECTS INC.

STATE OF COLORADO
AMY G. HURTIG-SMITH
400418
LICENSED ARCHITECT

Lazarus Designs
719.360.3164
ron@lazarusdesignsllc.com
lazarusdesigns.blogspot.com

A SUPPORTIVE HOUSING FACILITY

THE RIGHT PLACE
CARDINAL CAPITAL MGMT.

PROJECT NUMBER:	2019.90
PHASE:	PERMIT SET
PHASE ISSUE DATE:	4-27-20
DESIGNED BY:	RBP/AHS
SCALE:	As indicated

DOOR SCHEDULE/ TYPES/ DETAILS

SHEET ISSUE DATE: 04/27/20

A7.1

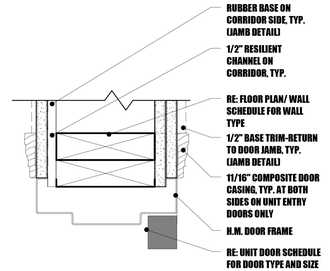

5 UNIT DOOR HEAD-JAMB SIM.

3" = 1'-0"

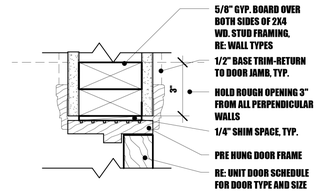

6 UNIT DOOR HEAD-JAMB SIM.

3" = 1'-0"

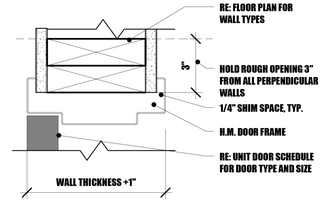

1 H.M. DOOR HEAD

3" = 1'-0"

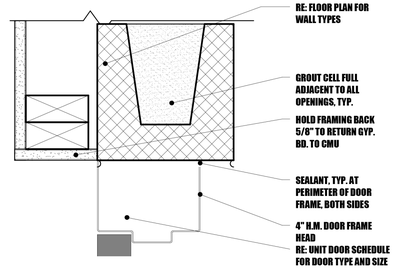

2 H.M. DOOR HEAD-1

3" = 1'-0"

3 H.M. DOOR JAMB 1

3" = 1'-0"

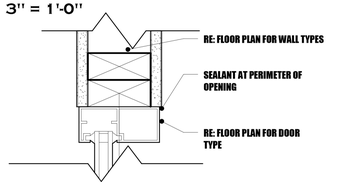

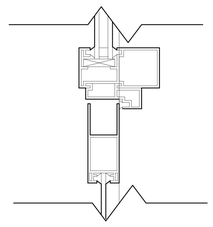

4 ALUM. DOOR HEAD

3" = 1'-0"

HGF ARCHITECTS INC.

STATE OF COLORADO
AMY G. HURTIG-SMITH
400418
LICENSED ARCHITECT

Lazarus Designs
719.360.3164
ron@lazarusdesignsllc.com
lazarusdesigns.blogspot.com

PROJECT NUMBER:	2019.90
PHASE:	PERMIT SET
PHASE ISSUE DATE:	4-27-20
DESIGNED BY:	RBP/AHS
SCALE:	3" = 1'-0"

DOOR DETAILS

SHEET ISSUE DATE: 04/27/20

A7.2

THE RIGHT PLACE
CARDINAL CAPITAL MGMT.
A SUPPORTIVE HOUSING FACILITY

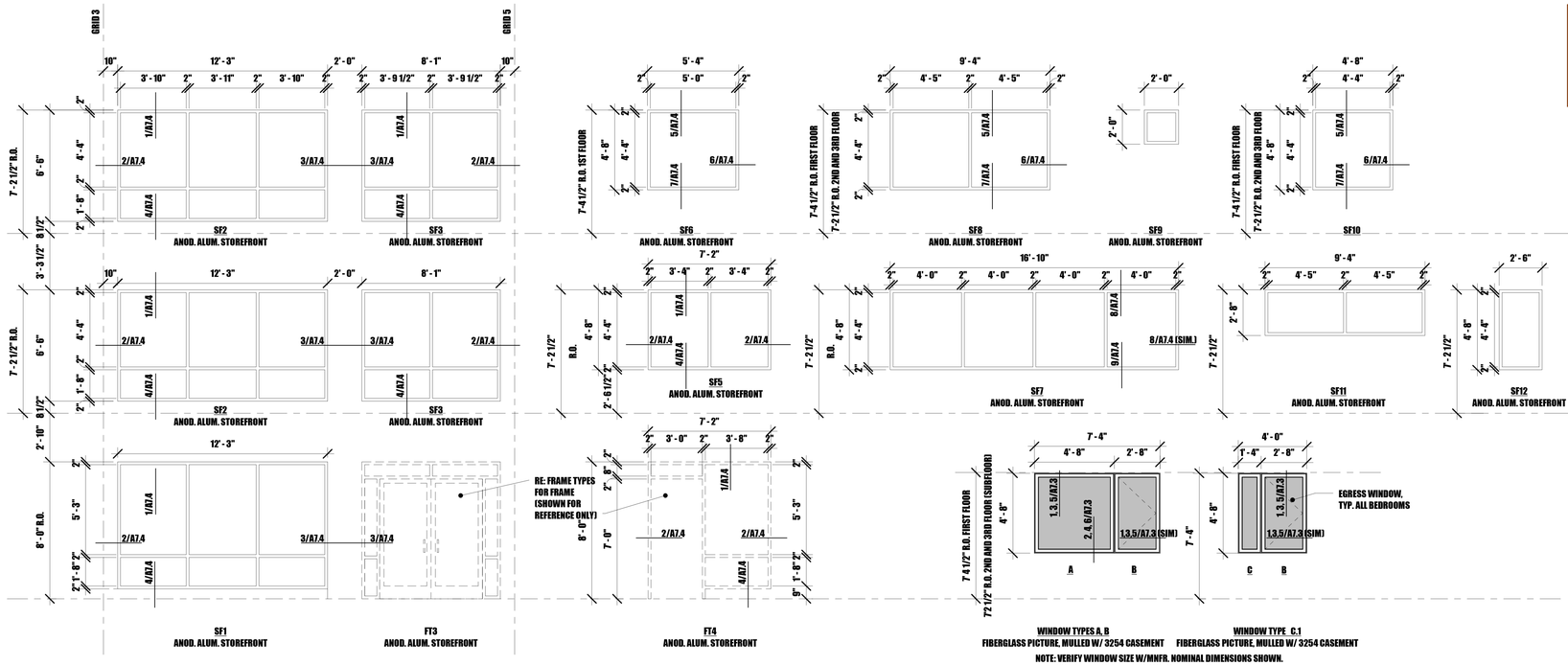

? WINDOW TYPES
1/4" = 1'-0"

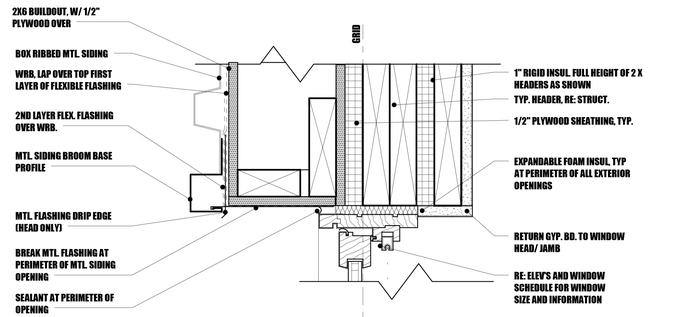

5 WINDOW HEAD-MTL. SIDING
3" = 1'-0"

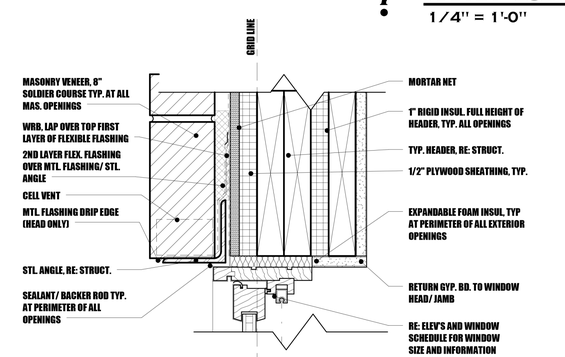

3 WINDOW HEAD-MASONRY
3" = 1'-0"

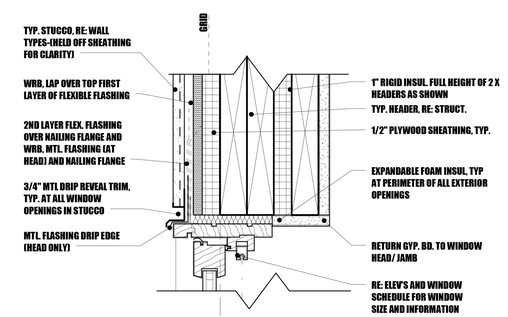

1 WINDOW HEAD-STUCCO
3" = 1'-0"

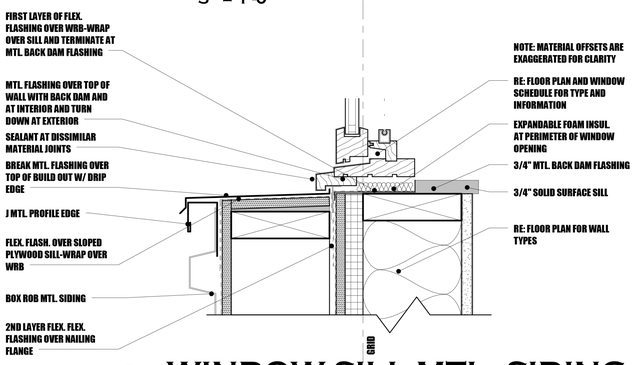

6 WINDOW SILL-MTL. SIDING
3" = 1'-0"

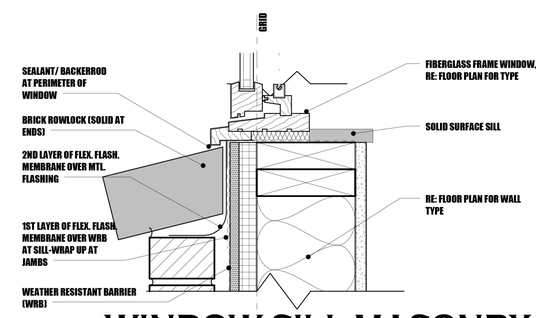

4 WINDOW SILL-MASONRY
3" = 1'-0"

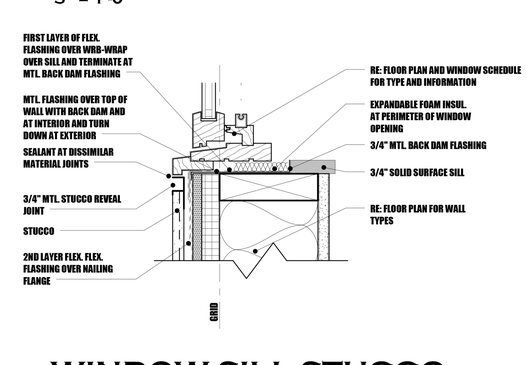

2 WINDOW SILL-STUCCO
3" = 1'-0"

HGF ARCHITECTS INC.
STATE OF COLORADO
AMY G. HURTIG-SMITH
400418
LICENSED ARCHITECT
Lazarus Designs
719.360.3164
ron@lazarusdesignsllc.com
lazarusdesigns.blogspot.com

PROJECT NUMBER:	2019.90
PHASE:	PERMIT SET
PHASE ISSUE DATE:	4-27-20
DESIGNED BY:	RBP/AHS
SCALE:	As indicated

WINDOW TYPES/ DETAILS

SHEET ISSUE DATE: 04/27/20

A7.3

THE RIGHT PLACE
CARDINAL CAPITAL MGMT.
A SUPPORTIVE HOUSING FACILITY

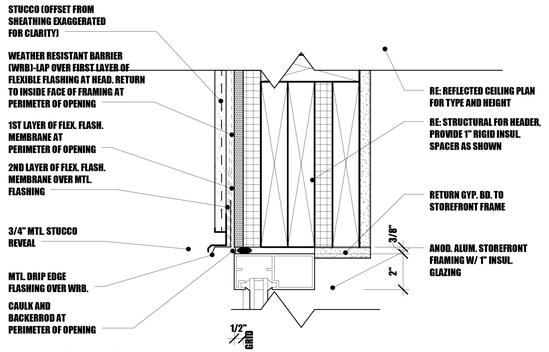

8 STOREFRONT HEAD-DETAIL 8

3" = 1'-0"

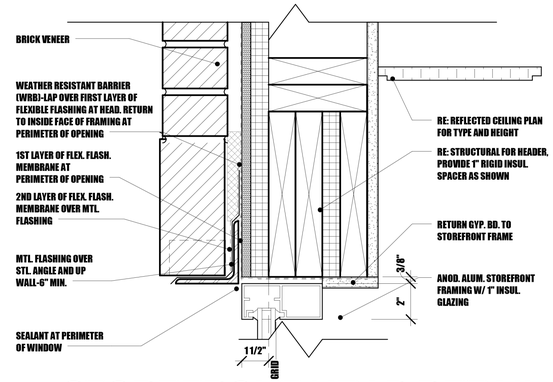

5 STOREFRONT HEAD-DETAIL 5

3" = 1'-0"

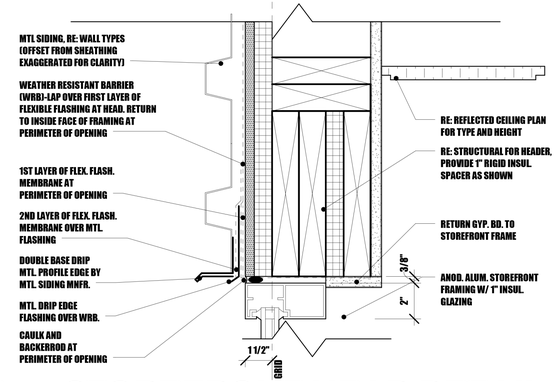

1 STOREFRONT HEAD-DETAIL 1

3" = 1'-0"

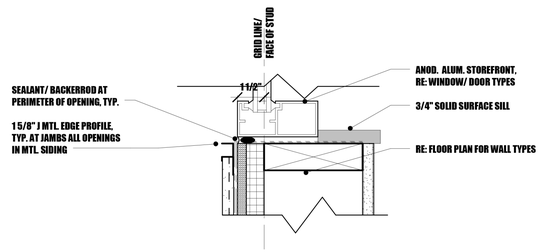

9 STOREFREONT SILL-DETAIL 9

3" = 1'-0"

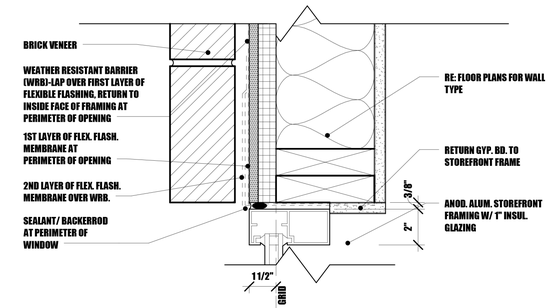

6 STOREFRONT JAMB-DETAIL 6

3" = 1'-0"

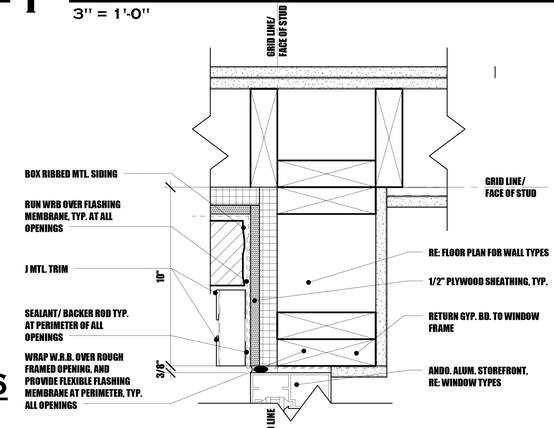

2 STOREFRONT JAMB-DETAIL 2

3" = 1'-0"

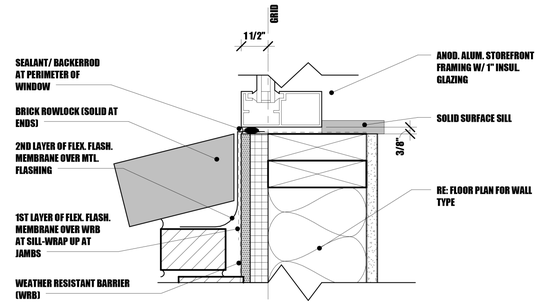

7 STOREFRONT SILL-DETAIL 7

3" = 1'-0"

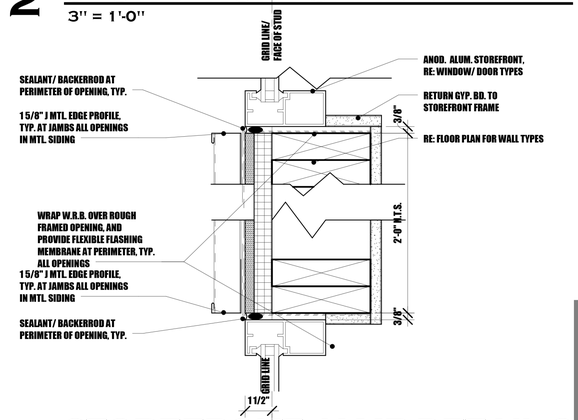

3 STOREFRONT JAMB-DETAIL 3

3" = 1'-0"

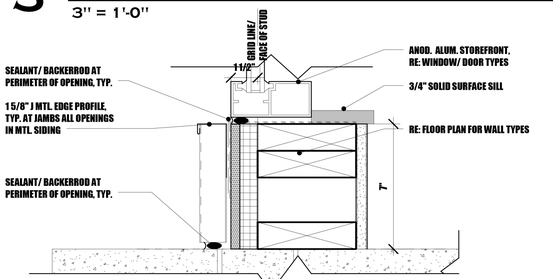

4 STOREFRONT SILL-DETAIL 4

3" = 1'-0"

HGF ARCHITECTS INC.

STATE OF COLORADO
AMY G. HURTIG-SMITH
400418
LICENSED ARCHITECT

Lazarus Designs
719.360.3164
ron@lazarusdesignsllc.com
lazarusdesigns.blogspot.com

PROJECT NUMBER:	2019.90
PHASE:	PERMIT SET
PHASE ISSUE DATE:	4-27-20
DESIGNED BY:	RBP/AHS
SCALE:	3" = 1'-0"

WINDOW DETAILS

SHEET ISSUE DATE: 04/27/20

A7.4

THE RIGHT PLACE
CARDINAL CAPITAL MGMT.
A SUPPORTIVE HOUSING FACILITY

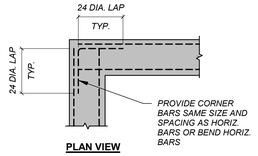

PLAN VIEW

TYPICAL CONCRETE WALL CORNER DETAIL

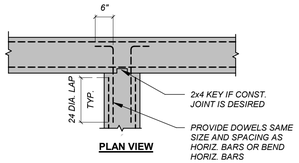

PLAN VIEW

TYPICAL CONCRETE WALL INTERSECTION DETAIL

1 / S1.1

1/2"=1'-0"

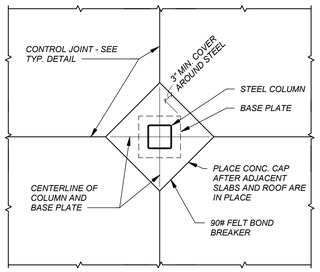

PLAN VIEW

TYPICAL CONCRETE CAP DETAIL

3 / S1.1

1/2"=1'-0"

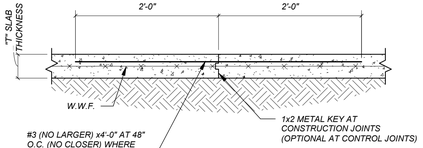

TYPICAL CONCRETE SLAB ON GRADE CONTROL JOINT AND CONSTRUCTION JOINT DETAIL

2 / S1.1

1"=1'-0"

- LOCATE CONTROL JOINTS ON COLUMN CENTERLINES WHERE POSSIBLE
- MAXIMUM SPACING OF CONTROL JOINTS NOT TO EXCEED 15'-0" IN EITHER DIRECTION.
- AT CONTROL JOINTS 1"1/4 DEEP SAW CUT JOINTS MAY BE USED IN LIEU OF KEY JOINTS. SEE SPECIFICATIONS FOR TIMING OF JOINT SAWING. CONTINUE W.W.F. THRU JOINT. CUT ALTERNATE WIRES CROSSING JOINT.
- AT CONTROL JOINTS, A ZIP-CAP PLASTIC JOINT FORMER MAY BE USED IN LIEU OF KEY JOINTS. CUT ALTERNATE WIRES CROSSING JOINT.
- CONTRACTOR TO REVIEW LOCATION OF PROPOSED CONTROL JOINT LOCATIONS WITH ARCHITECT PRIOR TO PLACING SLAB.

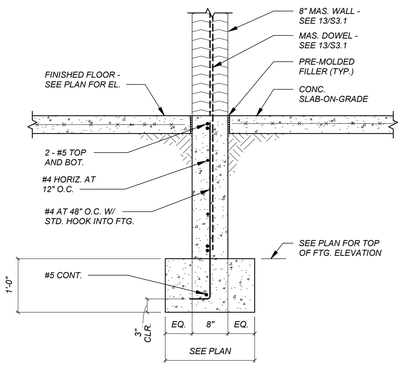

TYPICAL 8" INTERIOR FOUNDATION WALL DETAIL

4 / S1.1

3/4"=1'-0"

GENERAL NOTES

1. Materials and workmanship shall be in accordance with the requirements of "The International Building Code", 2015 Edition.
2. Contractor shall check and verify all dimensions shown on structural drawings with those shown on architectural.
3. Contractor shall notify Architect of any discrepancies between architectural and structural drawings and receive written clarification of discrepancies before proceeding with construction.
4. Contractor shall field measure and verify all existing conditions and dimensions at job site.
5. In case existing conditions or dimensions vary from those shown on drawing, Contractor shall notify the Architect so proper adjustments can be made.
6. Special inspections shall be performed in accordance with I.B.C. Section 1704 when such inspections are required by the Building Official. Contractor shall coordinate the work schedule with the special inspectors who are selected and paid by the Owner.
7. During the erection of the building, the contractor shall be responsible for temporary bracing and shoring to withstand all loads to which the structure may be subjected, including lateral loads, stockpiles of materials and equipment. Temporary bracing shall remain in place until all structural framing and diaphragms are in place with connections completed.
8. Where the Structural Drawings appear to conflict with OSHA requirements, the Structural Drawings represent final conditions only; the contractor shall add all erection framing, bolts, stabilizer plates, etc. as may be necessary to comply with OSHA.

FOUNDATION GENERAL NOTES

1. Recommendations for foundation type and design criteria, including bearing pressures, were provided by, "Geotechnical Engineering and Site Investigation Report for property at 1610 Bonforte Boulevard, Pueblo, Pueblo County, Colorado", dated January 22, 2020, by Jesik Consulting, a separate consultant to the Owner.
2. Maximum bearing pressure used in footing design: 3,000 psf
3. Soil profile type for seismic load consideration per International Building Code is site class B.
4. No foundation wall shall be placed without adequate notification to allow Engineer to observe reinforcing if he deems necessary.
5. In case conditions found at the site vary from those indicated on the drawings, the Architect is to be notified so he may adjust foundation to meet field conditions.
6. Backfill shall be placed against both side of foundation wall simultaneously.

DESIGN LOADS:

Roof Loads
- Dead Load: 23 psf Top Chord (includes 9 psf solar panel allowance); 7 psf Bottom Chord
- Snow Load (Uniform) Pg (for drifting): 30 psf; 20 psf
- Importance Factor, I = 1.0
- Thermal Factor, C = 1.0

Floor Loads
- Dead Load: 23 psf Top Chord; 7 psf Bottom Chord
- Live Load: 40 psf
- Typical Storage: 125 psf

Wind Loads - Exposure C, 115 mph 3 second gust (V_{ULT})
- Importance Factor: I_W = 1.0

Seismic Information:
- Importance Factor: I_E = 1.0
- Building Occupancy Category: II
- Mapped Spectral Acceleration: S_S = 0.182g; S_1 = 0.061g
- Site Class: B
- Spectral Response Coefficients: S_{DS} = 0.195; S_{D1} = 0.098
- Seismic Design Category: B
- Basic Seismic-Force-Resisting System consists of concentric braced frames, masonry shear walls and wood sheathed shear walls
- Seismic Response Coefficients: C = 0.075
- Response Modification Factors: R (masonry) = 3.5; R (wood shear walls) = 6.5
- Equivalent Lateral Force Procedure

CONCRETE GENERAL NOTES

1. Material and workmanship shall be in accordance with the requirements of Building Code Requirements for Structural Concrete" (ACI 318-14).
2. Concrete mixes shall conform to the following:
   - Mix "A" - For Interior Slabs on Grade
     - Minimum 28 Day Compressive Strength: 3500 psi
     - Maximum Aggregate Size: 3/4 inch
     - Air Content: 3%
     - Use Water Reducing Admixture per Manufacturer's Recommendations
     - Minimum of 540 lbs. of cementitious materials per cubic yard
     - Slump: 4 inch max.
     - Fly Ash may be substituted for up to 20% of cementitious materials in this mix
   - Mix "B" - For Footings and Foundation Walls
     - Minimum 28 Day Compressive Strength: 4500 psi
     - Maximum Aggregate Size: 3/4 inch
     - Entrained Air Content: 6% ± 1 1/2%
     - Slimp: 4 inch max.
     - Fly Ash may be substituted for up to 20% of cementitious materials in this mix
   - Mix "C" - For Exterior Site Concrete and Garage Slabs
     - Minimum 28 Day Compressive Strength: 4000 psi
     - Maximum Aggregate Size: 3/4 inch
     - Entrained Air Content: 6% ± 1 1/2%
     - Use Water Reducing Admixture per Manufacturer's Recommendations
     - Slump: 4 inch max.
     - Minimum of 540 lbs. of cementitious materials per cubic yard
3. All cement used in concrete shall be Type I/II.
4. All concrete shall have a minimum cementitious materials content of 470 lbs. per cubic yard unless otherwise specified.
5. Calcium Chloride shall not be added to concrete.
6. Reinforcing bars shall conform to ASTM A-615, Grade 60 or ASTM A-706.
7. Bar bending details and placing drawings shall be in accordance with the "Manual of Standard Practice for Detailing Reinforced Concrete Structures" ACI 315, latest edition).
8. Where welded reinforcement or deformed bar anchors are indicated on the drawings, steel specifications and welding shall conform to "Structural Welding Code - Reinforcing Steel". AWS D1.4 latest edition of The American Welding Society. Use ASTM A-706 where reinforcement is welded.
9. Provide bar supports and spacers to place all bars in proper location, and wire adequately at intersections to hold bars firmly in position while concrete is placed. Vertical dowels shall be supported in place prior to placing on concrete.
10. Bar supports and spacers which rest on or against exposed surface shall be hot dipped galvanized or plastic coated.
11. Continuous bars shall lap and dowels shall project adequately to provide a Class B splice but not less than 12" unless shown otherwise on drawings. Do not splice near maximum stress locations.
12. See architectural, mechanical and electrical drawings for additional openings, depressions, curbs, floor finishes, inserts and other embedded items.
13. Welded wire fabric shall conform to ASTM A-185 and shall lap a minimum of one full mesh plus 2" at side and end laps and shall be securely wired together, unless otherwise shown.
14. Stagger lap splices of horizontal bars in concrete walls.
15. Reinforcing bar sizes shown are English designation. The bars may be furnished with the equivalent metric markings:

English	#3	#4	#5	#6	#7	#8	#9	#10	#11
Metric	#10	#13	#16	#19	#22	#25	#29	#32	#36

TYPICAL MINIMUM REINFORCING BAR LAP LENGTHS

•In inches.
•Use for normal weight concrete f'c = 4500 psi, unless noted otherwise.

BAR SIZE		#3	#4	#5	#6	#7	#8	#9	#10	#11
TOP BARS	Non-staggered	23	31	38	46	67	76	86	96	107
	Staggered	18	24	30	35	51	59	66	74	82
OTHER BARS	Non-staggered	18	24	30	35	51	59	66	74	82
	Staggered	14	18	23	27	40	45	51	57	64

"Top Bars" are any horizontal reinforcing bars so placed that more than 12" of fresh concrete is cast in the member below the splice.

"Staggered" laps are laps located such that no more than half of the total reinforcement is spliced within the lap length.

MASONRY GENERAL NOTES

1. Grout shall be proportioned by volume and shall have sufficient water added to produce consistency for pouring without segregation.
   a. Fine grout shall be composed of one part portland cement, to which may be added not more than one-tenth part hydrated lime or lime putty, and two and one fourth to three parts sand.
   b. Coarse grout shall be composed of one part portland cement, to which may be added not more than one-tenth part hydrated lime or lime putty, and two to three parts sand, and not more than two parts gravel.
   c. Transit-Mixed Grout fore masonry:
      Minimum 28-day compressive strength : 2000 psi
      Aggregate size: 3/8 inch maximum
      Slump" 7 inch minimum, 10 inch maximum

   Coarse grout may be used in grout spaces in brick masonry 2 inches or more in horizontal dimension, and in grout spaces in filled-cell construction 3 inches or more in both horizontal dimensions.
2. Reinforcing steel shall conform to ASTM A-615, Grade 60 or ASTM A-706.
3. Reinforcing bars shall be lapped 48 bar diameters minimum when spliced, #6 and #7 bars shall lap 53 bar diameters. All vertical bar lengths to be 4'-8" plus required lap.
4. When a foundation dowel does not line up with the vertical core to be reinforced, it shall not be bent over, but shall be grouted into a core in direct vertical alignment, even though it is in an adjacent cell to the vertical wall reinforcing.
5. Vertical reinforcing bars shall be held in position at top and bottom. All debris and projecting mortar shall be cleaned out before pouring grout.
6. Vertical cells to be filled shall have vertical alignment to maintain a continuous unobstructed cell area not less than 2" x 3".
7. Cells containing reinforcing shall be solidly filled with grout in pours not to exceed 4'-8" and pours shall be stopped 1-1/2" below the top of a course to form a key at pour joints.
8. Grout shall be consolidated by mechanical vibration during placing before loss of plasticity in a manner to fill grout space. Grout pours greater than 12 inches shall be reconsolidated by mechanical vibration to minimize voids due to water loss. Grout pours 12 inches or less in height shall be mechanically vibrated, or puddle.
9. Mortar for all exterior walls and bearing walls shall be Type S.
10. Specified Compressive Strength, fm, of concrete masonry shall be 1500 psi at the age of 28 days.
11. Where other reinforcing is not required by the drawings, provide one #5 bar at all sides of, and adjacent to, every opening which exceeds 24" in either direction. Extend vertical bars full height of wall. Extend horizontal bars 24" beyond each side of opening. Where possible provide U-block immediately below and one course above the opening and grout the reinforcing in place. In double wythe or cavity walls place the reinforcing in the cavity and build solid with mortar. In single wythe brick walls provide "Extra Heavy Dur-O-Wal" (or equal) above and below the opening in lieu of #5 bars.
12. Continue bond beams minimum 2'-0" around corners. Where bond beam steps, lap bond beam courses minimum 2'-0".
13. All concrete block below grade shall be grouted solid.
14. Continue bond beam reinforcing through masonry control joints.
15. Masonry design is based on full allowable design stresses.

STRUCTURAL STEEL GENERAL NOTES

1. All steel shall conform to the "Standard Specification for Structural Steel" ASTM Designation A572, Grade 50, or ASTM A992, latest edition, except where noted otherwise. Angles and plates shall conform to ASTM A36, A572, or A992. Round hollow structural steel sections shall conform to ASTM A501, Fy = 36 ksi; or ASTM A53, Types E or S, Grade B, Fy = 35 ksi. Square or rectangular hollow structural sections shall conform to ASTM A500, Grade B, Fy = 46 ksi.
2. All detailing, fabrication and erection shall conform to AISC "Specification for Structural Steel Buildings", and the AISC "Code of Standard Practice for Steel Buildings and Bridges", latest edition, and "Load and Resistance Factor Design Specification for Structural Steel Buildings" when applicable.
3. This structure contains "non-self-supporting steel frames" per AISC definition. The contractor shall coordinate the installation of all necessary temporary bracing which shall remain in place until the lateral support system is constructed and connected to the framing.
4. Beam connections not shown on the details shall be designed by the steel fabricator in accordance with Tables 10-1 and 10-2 of the AISC "Manual of Steel Construction", Fourteenth Edition. Beam reactions not shown on plans or details shall be computed from the design loads shown on the drawings.
5. Shop connections shall be welded unless noted otherwise.
6. Field connections shall be made with 3/4" diameter ASTM A325 High Strength Bolts. Connections shall be bearing-type tightened to a "snug-tight" condition unless noted as "slip critical". Connections utilizing bolts shall be pretensioned but do not require faying surface preparation unless noted otherwise.
7. High strength bolted connections shall conform to the "Specification for Structural Joints Using ASTM A325 or A490 Bolts", approved by Research Council on Riveted and Bolted Structural Joints of the Engineering Foundation, latest edition, endorsed by AISC. Fasteners, noted as "Slip Critical", shall be "Load Indicator Bolts" as manufactured by Lohr, Le Jeune, Bethlehem Steel, or approved equal and tightened per manufacturer's specification.
8. Equivalent welded connections may be substituted for bolted connections subject to Architect's approval.
9. Welded beam connections shall be in accordance with Table 10-3 or 10-4 of the AISC "Manual of Steel Construction", Fourteenth Edition.
10. All welding shall be done by certified welding operators and shall conform to "AWS Structural Welding Code" (AWS D1.1), latest edition.
11. Welding sizes not otherwise shown shall be minimum continuous 1/4 inch fillet welds, or equal to the thickness of the thinner material minimum 1/16th inch, whichever is less.
12. All welding shall be done with AWS A5.1 or A5.5 E70 X8 electrodes.
13. Areas within 2 inches of field welds shall not be painted until after welding. Field welds, bolt heads, nuts and other surfaces not shop painted and surfaces abraded during shipping and erection shall be field painted immediately after erection.
14. All structural steel exposed to view shall conform to the provisions for "Architecturally Exposed Structural Steel" in the AISC Code of Standard Practice.
15. Field welded stud connectors shall be welded to steel members with automatically timed stud welding equipment connected to a suitable power source.

TIMBER GENERAL NOTES

1. All wood framing shall conform to the "National Design Specification for Wood Construction", latest edition, recommended by the "National Forest Products Association".
2. Sawn lumber framing members shall conform to the following species and grades: Hem-Fir #2 or better, unless noted otherwise on plan.
3. Laminated Veneer Lumber (LVL) prefabricated structural wood beams and joists shall be "Microlam" as manufactured by iLevel, or "Versa-Lam" as manufactured by Boise Cascade, Inc.
4. Sheathing panels shall be identified with the appropriate trademark of the American Plywood Association, and shall meet the requirements of U.S. Product Standard PS1-07 or APA PRP-108, Performance Standards, latest edition.
5. All roof sheathing shall be 24/16, 7/16" thick APA rated sheathing exposure 1. Roof sheathing nailing shall be 8d common nails at 6" on center maximum at all edges and boundaries, unless noted otherwise. Nailing along intermediate members shall be 12" on center maximum.
6. All floor sheathing shall be 3/4" thick tongue-and-groove APA rated exposure 1 with panel identification 48/24.
7. Floor sheathing nailing shall be 10d deformed shank nails at 6" on center maximum at all supported edges unless noted otherwise, nailing along intermediate members shall be at 10" on center maximum.
8. All sheathing for bearing and shear walls shall be Exposure 1 rated and shall be as noted on the plans. All panel edges shall be backed with 2" nominal framing.
9. Glue floor sheathing to joists per American Plywood Association's Glued Floor System recommendation.
10. Floor and roof sheathing shall be placed with 8'-0" dimension perpendicular to joist framing, stagger joints. Panels to be continuous over two or more spans. Panel end joints shall occur over framing. Allow 1/8 inch spacing at panel ends and 1/8 inch at panel edges unless otherwise recommended by the panel manufacturer.
11. Design of prefabricated wood trusses shall be in accordance with "National Design Standard For Metal Plate Connected Wood Truss Construction", ANSI/TPI-1, and shall be under the direct supervision of a Professional Engineer Registered in Colorado. Trusses shall be installed in strict accordance with the manufacturer's specifications.
12. The Contractor and Truss supplier shall comply with the requirements and recommendations of TPI HIB "Commentary and Recommendations for Handling Installing and Bracing Metal Plate Connected Wood Trusses" and TPI DSB "Recommended Design Specification for Temporary Bracing of Metal Plate Connected Wood Trusses".
13. All bolts shall be ASTM A-307.
14. Install blocking panels between all trusses at all supports. Install per manufacturer's recommendations, and as shown on the drawings.
15. Install solid blocking between all sawn lumber joists at all supports. Solid blocking shall be same depth as adjacent joists and not less than 2" in nominal thickness unless shown otherwise on drawing.
16. Double and triple built-up solid sawn wood members shall be spiked together with two 16d nails spaced at 1'-4" o.c. on center except where noted otherwise on drawings.
17. Nails for wood sheathing shall be common nails.
18. Minimum nailing for all wood framing shall conform to Table No. 2304.9.1, International Building Code, 2015 Edition, unless noted otherwise.

Trusses Pending
Truss engineering must be submitted a minimum of one week prior to frame inspection and cannot be walked through. The truss package must include a signed and dated "Shop Drawing Review" stamped from the design professional of record that verifies conformance with the approved construction design documents. Unless previously shown on the approved structural framing plans, the truss layout must show all necessary truss connection hardware including hangers, uplift connections, and truss bearing enhancers.

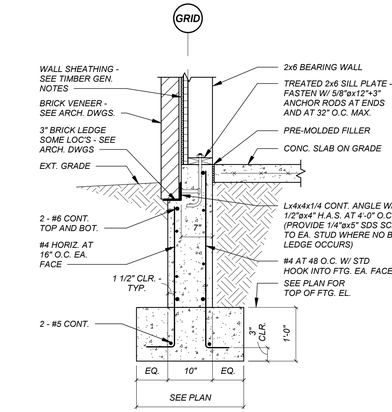

5 / S1.1 — 3/4"=1'-0"

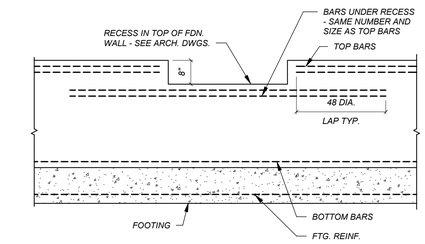

TYPICAL FOUNDATION WALL RECESS DETAIL

6 / S1.1

1/2"=1'-0"

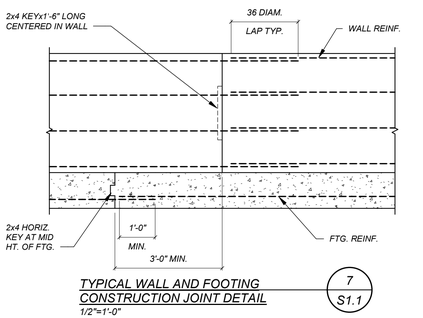

TYPICAL WALL AND FOOTING CONSTRUCTION JOINT DETAIL

7 / S1.1

1/2"=1'-0"

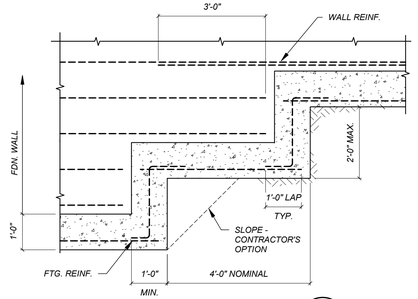

TYPICAL STEPPED FOOTING DETAIL

8 / S1.1

1/2"=1'-0"

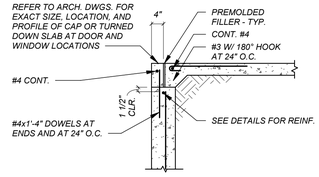

- FOR INFORMATION NOT SHOWN HERE REFER TO TYPICAL FOUNDATION WALL OR GRADE BEAM RECESS DETAIL AND APPLICABLE SECTIONS.

TYPICAL TOP OF WALL AT DOOR DETAIL

9 / S1.1

1/2"=1'-0"

HGF ARCHITECTS INC.

HCDA ENGINEERING, INC.
STRUCTURAL CONSULTANTS
9 SOUTH WEBER STREET
COLORADO SPRINGS, COLORADO 80903
(719)633-7784 FAX (719)471-3173

COLORADO LICENSED
ANDREW BRUCE BAILEY
33390
4-27-20
PROFESSIONAL ENGINEER

PROJECT NUMBER:	19197
PHASE:	PERMIT SET
PHASE ISSUE DATE:	04/27/20
DESIGNED BY:	ABB, CBA, RDB
SCALE:	As indicated

DETAILS AND GENERAL NOTES

SHEET ISSUE DATE: 04/27/20

S1.1

A Supportive Housing Facility

The Right Place Cardinal Capital

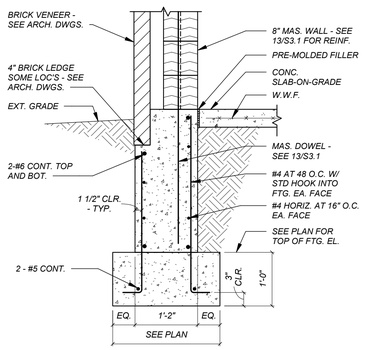

1 S1.2 3/4"=1'-0"

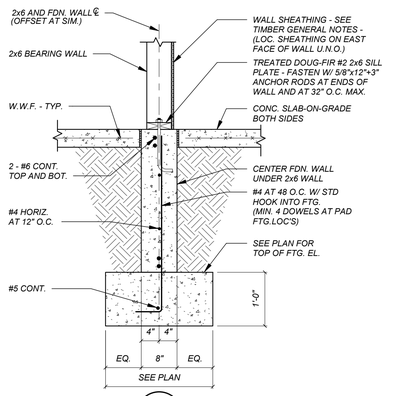

2 S1.2 3/4"=1'-0"

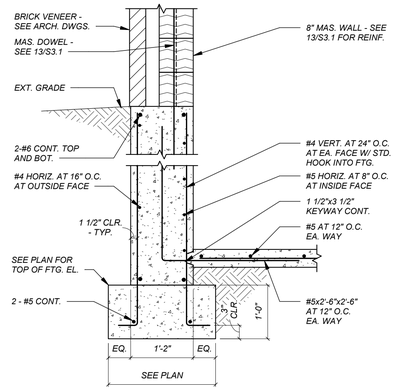

3 S1.2 3/4"=1'-0"

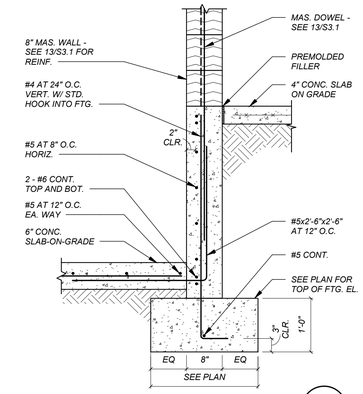

ELEVATOR PIT DETAIL
3/4"=1'-0"

4 S1.2

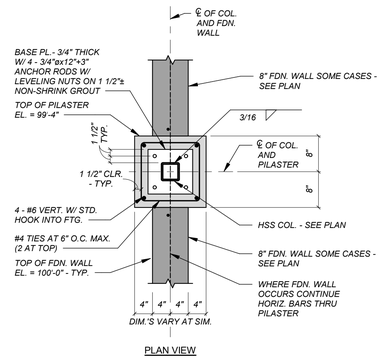

PLAN VIEW

5 S1.2 3/4"=1'-0"

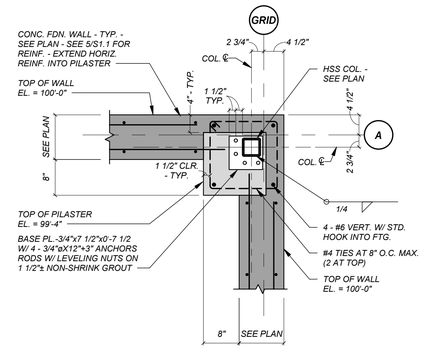

PLAN VIEW

6 S1.2 3/4"=1'-0"

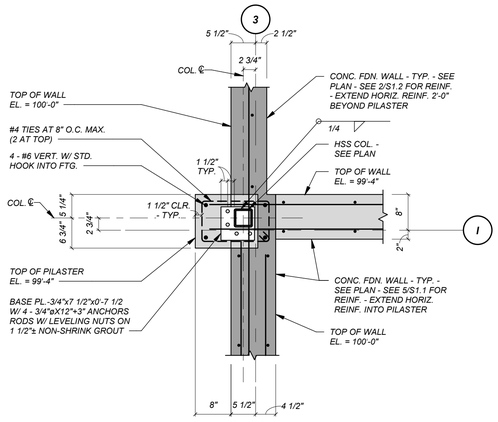

PLAN VIEW

7 S1.2 3/4"=1'-0"

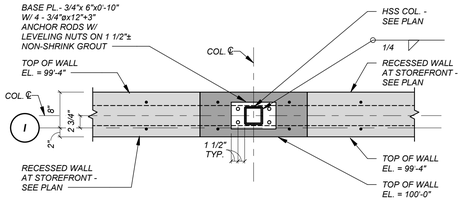

PLAN VIEW

8 S1.2 3/4"=1'-0"

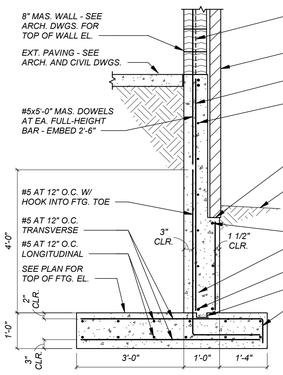

9 S1.2 1/2"=1'-0"

HGF ARCHITECTS INC.

COLORADO LICENSED PROFESSIONAL ENGINEER ANDREW BRUCE BAILEY 33390 4-27-20

HCDA
HCDA ENGINEERING, INC.
STRUCTURAL CONSULTANTS
9 SOUTH WEBER STREET
COLORADO SPRINGS, COLORADO 80903
(719)635-7784 FAX (719)471-5173

A SUPPORTIVE HOUSING FACILITY

THE RIGHT PLACE
CARDINAL CAPITAL

PROJECT NUMBER: 19197
PHASE: PERMIT SET
PHASE ISSUE DATE: 04/27/20
DESIGNED BY: ABB, CBA, RDB
SCALE: As indicated

DETAILS

SHEET ISSUE DATE: 04/27/20

S1.2

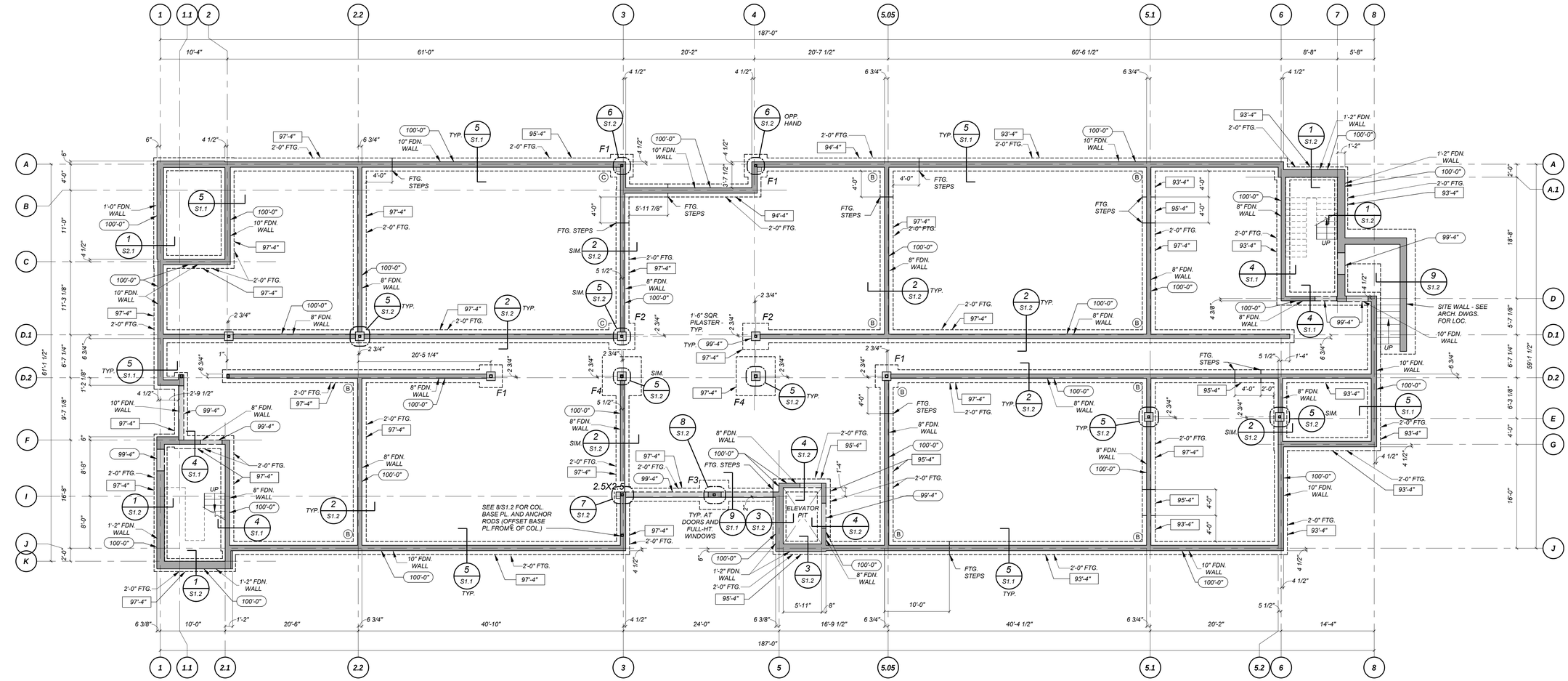

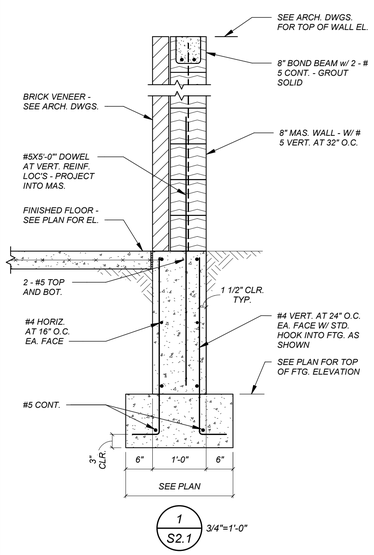



FOUNDATION PLAN

1/8"=1'-0"

- INDICATES TOP OF FOUNDATION WALL ELEVATION.
- INDICATES TOP OF FOOTING ELEVATION.
- FLOOR SLAB TO 4" CONRETE SLAB-ON-GRADE - REINFORCE WITH 6x6 - W1.4xW1.4 W.W.F
- TOP OF SLAB ELEVATION = 100'-0" UNLESS NOTED OTHERWISE.
- SEE SPECIFICATIONS AND GEOTECHNICAL REPORT FOR PREPARATIONS REQUIRED AT SLAB-ON-GRADE.
- ALL PAD FOOTINGS SHALL BE CENTERED UNDER COLUMNS UNLESS NOTED OTHERWISE.
- (X) INDICATES HOLDOWN REQUIRED - SEE SCHEDULE ON 1/S3.2 AND 3/S3.2.

FOOTING SCHEDULE			
MARK	SIZE	THICKNESS	REINFORCING
F1	3'-6"x3'-6"	12"	4 - #5 EA. WAY
F2	4'-0"x4'-0"	1'-2"	5 - #5 EA. WAY
F3	4'-6"x4'-6"	1'-2"	5 - #6 EA. WAY
F4	6'-0"x6'-0"	1'-6"	6 - #6 EA. WAY

HGF ARCHITECTS INC.

COLORADO LICENSED ANDREW BRUCE BAILEY 33390 PROFESSIONAL ENGINEER 4-27-20

HCDA
HCDA ENGINEERING, INC.
STRUCTURAL CONSULTANTS
9 SOUTH WEBER STREET
COLORADO SPRINGS, COLORADO 80903
(719)635-7784 FAX (719)471-5173

A SUPPORTIVE HOUSING FACILITY

THE RIGHT PLACE
CARDINAL CAPITAL

PROJECT NUMBER: 19197
PHASE: PERMIT SET
PHASE ISSUE DATE: 04/27/20
DESIGNED BY: ABB, CBA, RDB
SCALE: As indicated

FOUNDATION PLAN

SHEET ISSUE DATE: 04/27/20

S2.1

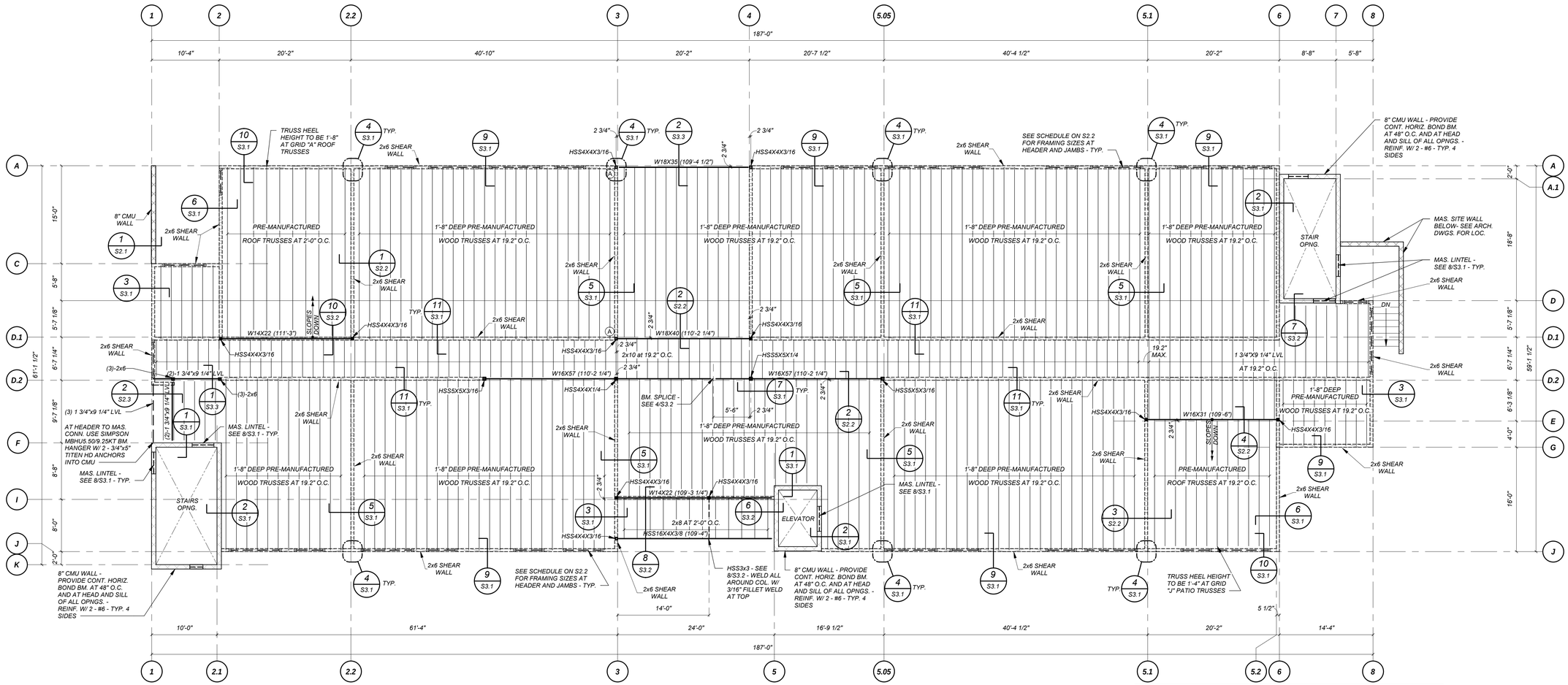

SECOND FLOOR FRAMING PLAN

1/8"=1'-0"

- WALL STUD DESIGNATION INDICATED ON PLAN IS FROM THE FIRST FLOOR TO THE SECOND FLOOR.
- ALL WALL STUDS SHALL BE 2x6 - HEM-FIR NO.2 AT 16" O.C. MAXIMUM - TYPICAL UNLESS NOTED OTHERWISE.
- TOP OF FLOOR SHEATHING ELEVATION = 110'-10".
- (__'__") INDICATES TOP OF STEEL ELEVATION.
- INTERIOR STRUCTURAL WALLS SHALL BE SHEATHED WITH 15/32" APA STRUCTURAL I SHEATHING WITH 10d NAILS AT 6" O.C. AT PANEL EDGES AND 12" O.C. IN THE FIELD.
- EXTERIOR WALLS SHALL BE SHEATHED WITH ZIP SYSTEM TYPE R-6 SHEATHING WITH 10d NAILS AT 4" O.C. AT PANEL EDGES AND 12" O.C. IN THE FIELD.
- (X) INDICATES HOLDOWN REQUIRED - SEE SCHEDULE ON 1/S3.2 AND 3/S3.2.

HEADER SCHEDULE

OPENING WIDTH	HEADER		TRIMMER STUDS	KING STUDS
	COMPOSITION	LOCATION	QUANTITY	QUANTITY
≤ 12'-4"	3 - 1 3/4"x9 1/4" LVL	BELOW ROOF	1 - 2x6	3 - 2x6
	3 - 1 3/4"x9 1/4" LVL	BELOW THIRD	2 - 2x6	3 - 2x6
	3 - 1 3/4"x9 1/4" LVL	BELOW SECOND	2 - 2x6	3 - 2x6
≤ 7'-4"	3 - 2x10	BELOW ROOF	1 - 2x6	2 - 2x6
	2 - 1 3/4"x9 1/4" LVL	BELOW THIRD	2 - 2x6	2 - 2x6
	2 - 1 3/4"x9 1/4" LVL	BELOW SECOND	2 - 2x6	2 - 2x6
≤ 4'-0"	2 - 2x10	BELOW ROOF	1 - 2x6	1 - 2x6
	2 - 2x10	BELOW THIRD	1 - 2x6	1 - 2x6
	2 - 2x10	BELOW SECOND	2 - 2x6	2 - 2x6

- HEADER, TRIMMER STUD, AND KING STUD SIZES ARE TYPICAL UNLESS NOTED OTHERWISE.
- ALL WINDOW AND DOOR FRAMING SHALL BE HEM-FIR #2 OR BETTER, UNLESS NOTED OTHERWISE.

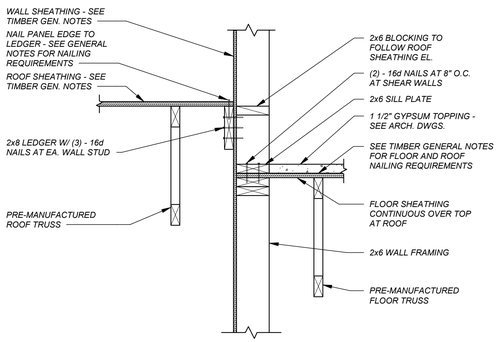

1 S2.2 1"=1'-0"

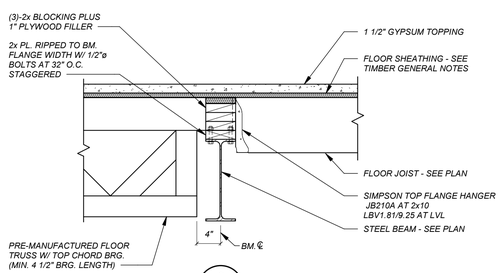

2 S2.2 1"=1'-0"

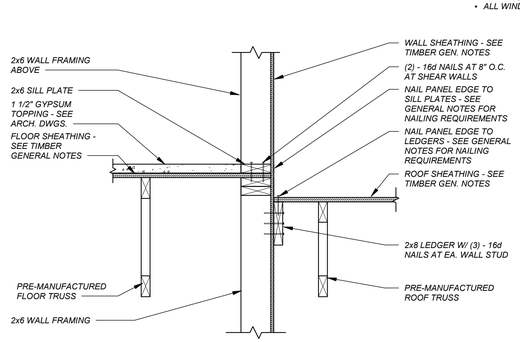

3 S2.2 1"=1'-0"

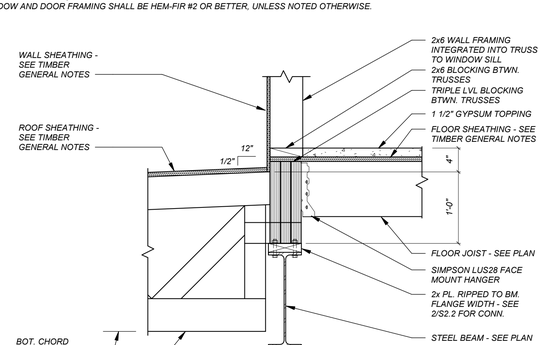

4 S2.2 1"=1'-0"

HGF ARCHITECTS INC.

COLORADO LICENSED ANDREW BRUCE HOLTON PROFESSIONAL ENGINEER 33390 4-27-20

HCDA ENGINEERING, INC.
STRUCTURAL CONSULTANTS
9 SOUTH WEBER STREET
COLORADO SPRINGS, COLORADO 80903
(719)633-7784 FAX (719)471-5173

A SUPPORTIVE HOUSING FACILITY

THE RIGHT PLACE
CARDINAL CAPITAL

PROJECT NUMBER: 19197
PHASE: PERMIT SET
PHASE ISSUE DATE: 04/27/20
DESIGNED BY: ABB, CBA, RDB
SCALE: As indicated

SECOND FLOOR FRAMING PLAN

SHEET ISSUE DATE: 04/27/20

S2.2

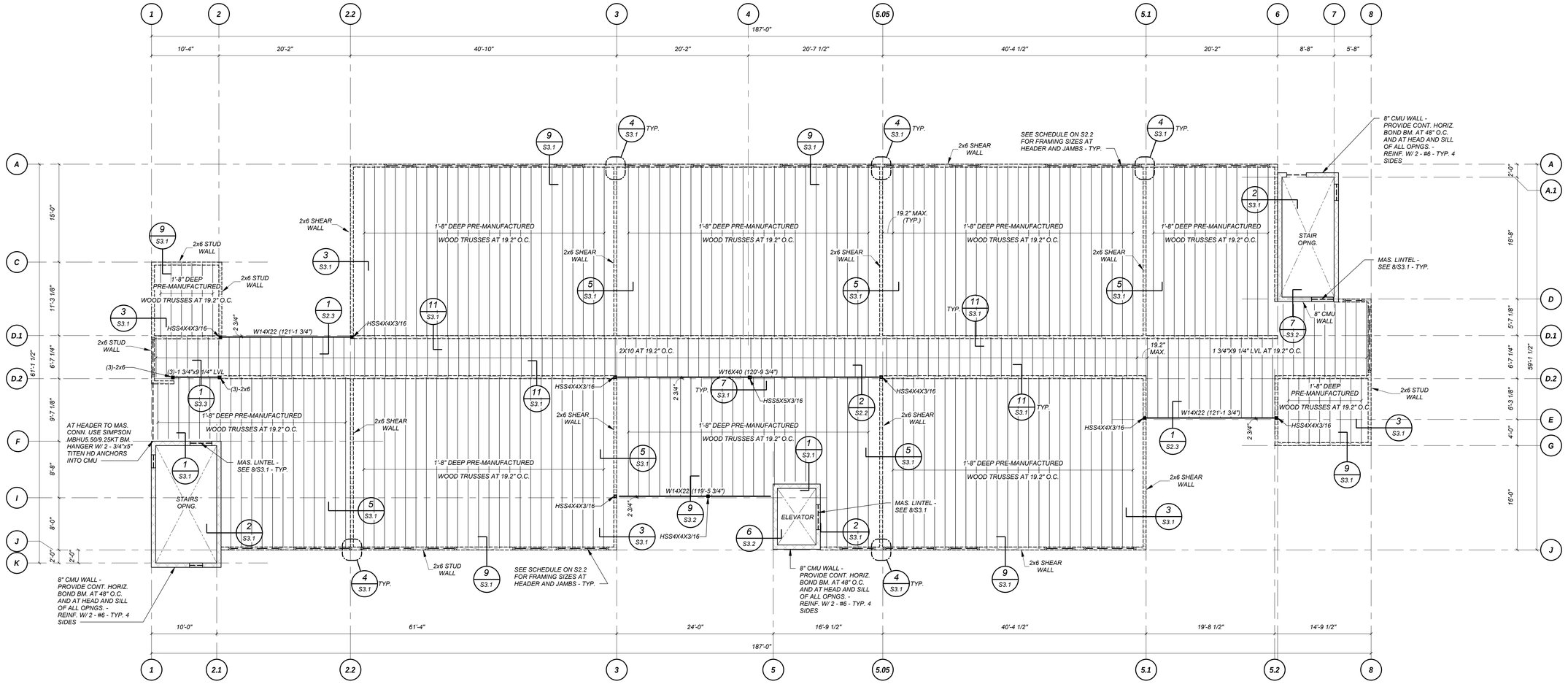

NORTH

THIRD FLOOR FRAMING PLAN

1/8"=1'-0"

- WALL STUD DESIGNATION INDICATED ON PLAN IS FROM THE SECOND FLOOR TO THE THIRD FLOOR.
- ALL WALL STUDS SHALL BE 2x6 - HEM-FIR NO.2 AT 16" O.C. MAXIMUM - TYPICAL UNLESS NOTED OTHERWISE.
- TOP OF FLOOR SHEATHING ELEVATION = 121'-4".
- (_ _ _) INDICATES TOP OF STEEL ELEVATION.
- INTERIOR STRUCTURAL WALLS SHALL BE SHEATHED WITH 15/32" APA STRUCTURAL I SHEATHING WITH 10d NAILS AT 6" O.C. AT PANEL EDGES AND 12" O.C. IN THE FIELD.
- EXTERIOR WALLS SHALL BE SHEATHED WITH ZIP SYSTEM TYPE R-6 SHEATHING WITH 10d NAILS AT 4" O.C. AT PANEL EDGES AND 12" O.C. IN THE FIELD.
- (X) INDICATES HOLDOWN REQUIRED - SEE SCHEDULE ON 1/S3.2 AND 3/S3.2.

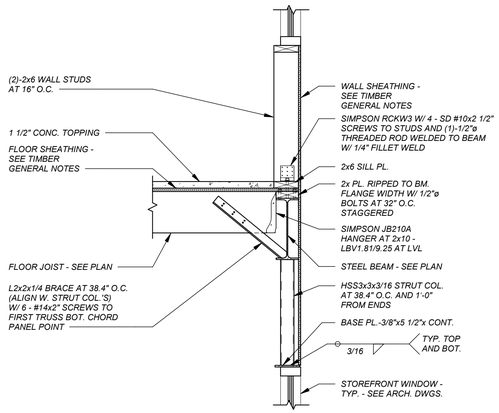

1 / S2.3 3/4"=1'-0"

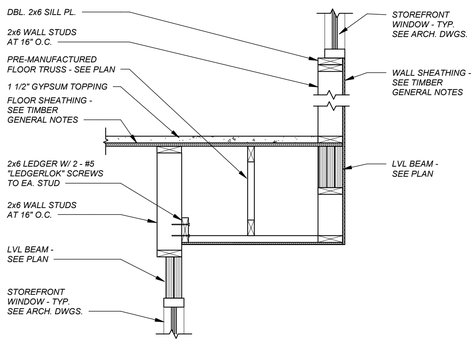

2 / S2.3 3/4"=1'-0"

COLORADO LICENSED
ANDREW BRUCE BAILEY
33390
4-27-20
PROFESSIONAL ENGINEER

HCDA
HCDA ENGINEERING, INC.
STRUCTURAL CONSULTANTS
9 SOUTH WEBER STREET
COLORADO SPRINGS, COLORADO 80903
(719)633-7784 FAX (719)471-3173

A SUPPORTIVE HOUSING FACILITY

THE RIGHT PLACE
CARDINAL CAPITAL

PROJECT NUMBER:	19197
PHASE:	PERMIT SET
PHASE ISSUE DATE:	04/27/20
DESIGNED BY:	ABB, CBA, RDB
SCALE:	As indicated

THIRD FLOOR FRAMING PLAN

SHEET ISSUE DATE: 04/27/20

S2.3

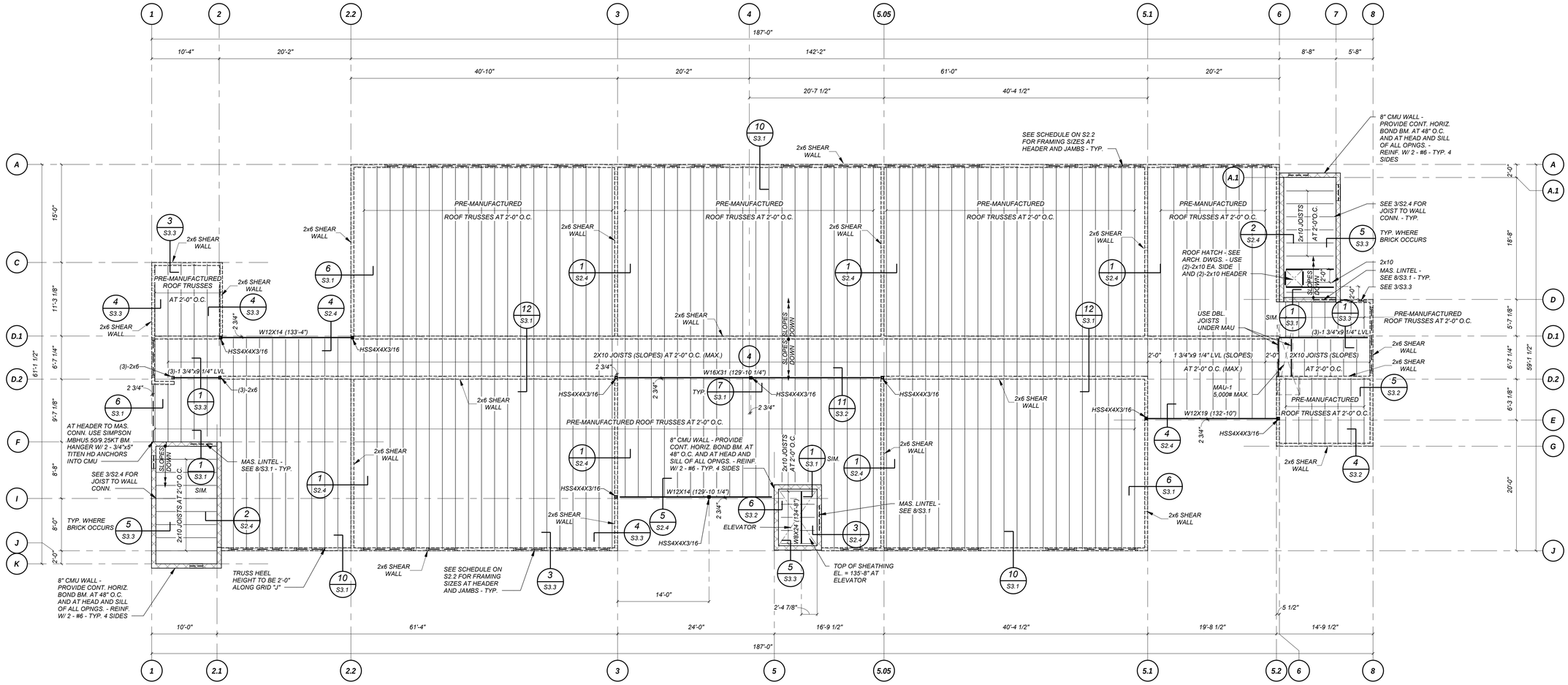



ROOF FRAMING PLAN

1/8"=1'-0"

- WALL STUD DESIGNATION INDICATED ON PLAN IS FROM THE THIRD FLOOR TO THE ROOF.
- ALL WALL STUDS SHALL BE 2x6 - HEM-FIR NO.2 AT 16" O.C. MAXIMUM - TYPICAL UNLESS NOTED OTHERWISE.
- TRUSS BEARING ELEVATION = 130'-1 1/4".
- (__'-__") INDICATES TOP OF STEEL ELEVATION.
- INTERIOR STRUCTURAL WALLS SHALL BE SHEATHED WITH 15/32" APA STRUCTURAL I SHEATHING WITH 10d NAILS AT 6" O.C. AT PANEL EDGES AND 12" O.C. IN THE FIELD.
- EXTERIOR WALLS SHALL BE SHEATHED WITH ZIP SYSTEM TYPE R-6 SHEATHING WITH 10d NAILS AT 4" O.C. AT PANEL EDGES AND 12" O.C. IN THE FIELD.
- (X) INDICATES HOLDOWN REQUIRED - SEE SCHEDULE ON 1/S3.2 AND 3/S3.2.

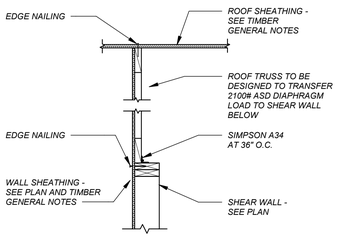

1 S2.4 3/4"=1'-0"

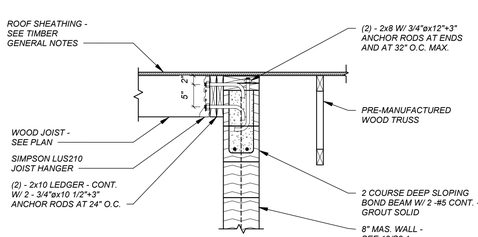

2 S2.4 3/4"=1'-0"

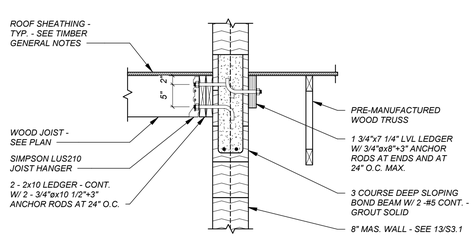

3 S2.4 3/4"=1'-0"

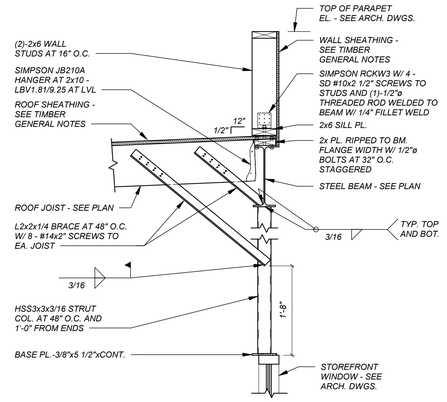

4 S2.4 3/4"=1'-0"

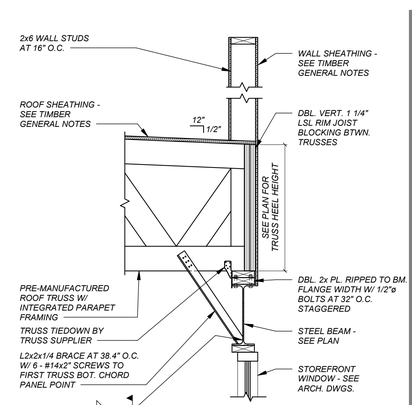

5 S2.4 3/4"=1'-0"

HGF ARCHITECTS INC.

COLORADO LICENSED
ANDREW BRUCE BAILEY
33390
4-27-20
PROFESSIONAL ENGINEER

HCDA
HCDA ENGINEERING, INC.
STRUCTURAL CONSULTANTS
9 SOUTH WEBER STREET
COLORADO SPRINGS, COLORADO 80903
(719)633-7784 FAX (719)471-3173

A SUPPORTIVE HOUSING FACILITY

THE RIGHT PLACE
CARDINAL CAPITAL

PROJECT NUMBER:	19197
PHASE:	PERMIT SET
PHASE ISSUE DATE:	04/27/20
DESIGNED BY:	ABB, CBA, RDB
SCALE:	As indicated

ROOF FRAMING PLAN

SHEET ISSUE DATE: 04/27/20

S2.4

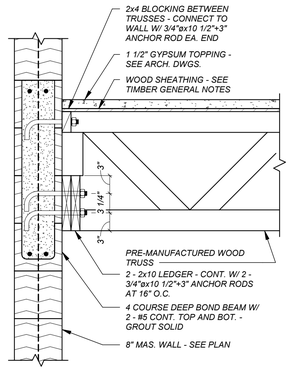

1 / S3.1 1"=1'-0"

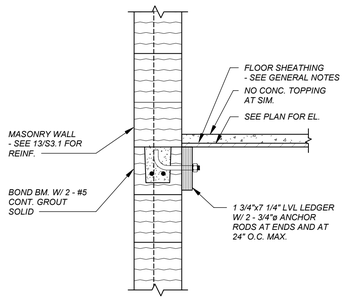

2 / S3.1 1"=1'-0"

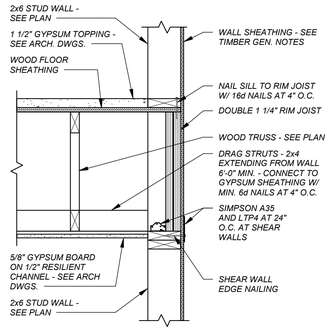

3 / S3.1 1"=1'-0"

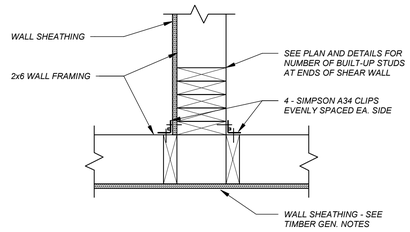

PLAN VIEW

TYPICAL INTERIOR NORTH-SOUTH SHEAR WALL CONNECTION DETAIL — 4 / S3.1

1 1/2"=1'-0"

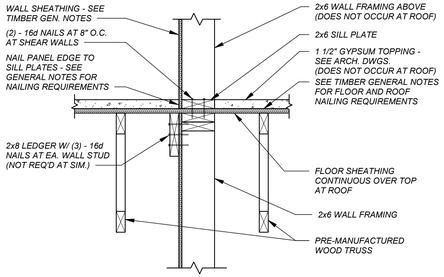

5 / S3.1 1"=1'-0"

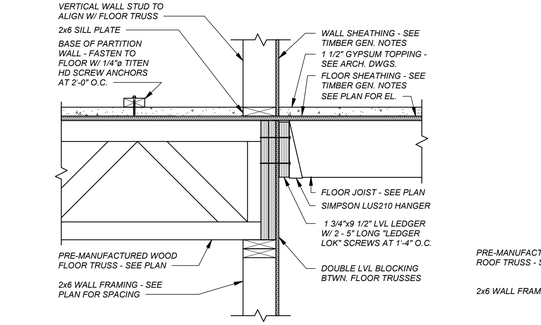

6 / S3.1 1"=1'-0"



TYPICAL BEAM TO COLUMN DETAIL — 7 / S3.1

1"=1'-0"

TYPICAL MASONRY LINTEL DETAIL — 8 / S3.1

3/4"=1'-0"

- TYPICAL UNLESS DETAILED OTHERWISE.
- BEAR 8" MINIMUM EACH SIDE OF OPENING.
- TEMPORARY SHORING TO REMAIN IN PLACE UNTIL COMPRESSIVE STRENGTH (f'm) IS AT LEAST 1100 PSI.

9 / S3.1 1"=1'-0"

10 / S3.1 1"=1'-0"

11 / S3.1 1"=1'-0"

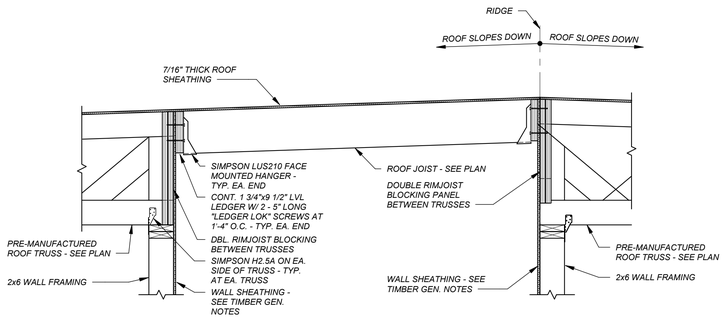

12 / S3.1 3/4"=1'-0"

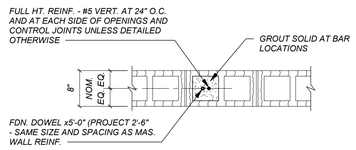

PLAN VIEW

8" MASONRY WALL REINFORCING DETAIL — 13 / S3.1

3/4"=1'-0"

- SEE ALSO DETAIL 8/S3.1.
- SEE PLAN NOTES AND DETAILS FOR REQUIRED HORIZONTAL BOND BEAMS.
- GROUT ELEVATOR WALLS SOLID FULL HEIGHT.

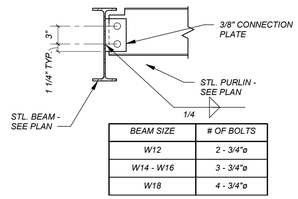

BEAM SIZE	# OF BOLTS
W12	2 - 3/4"ø
W14 - W16	3 - 3/4"ø
W18	4 - 3/4"ø

TYPICAL PURLIN TO BEAM CONNECTION DETAIL — 14 / S3.1

1"=1'-0"

- TYPICAL CONNECTION UNLESS DETAILED OTHERWISE

HGF ARCHITECTS INC.

COLORADO LICENSED ANDREW BRUCE BRESICH 33390 PROFESSIONAL ENGINEER 4-27-20

HCDA
HCDA ENGINEERING, INC.
STRUCTURAL CONSULTANTS
9 SOUTH WEBER STREET
COLORADO SPRINGS, COLORADO 80903
(719)635-7784 FAX (719)471-5173

A SUPPORTIVE HOUSING FACILITY

THE RIGHT PLACE
CARDINAL CAPITAL

PROJECT NUMBER: 19197
PHASE: PERMIT SET
PHASE ISSUE DATE: 04/27/20
DESIGNED BY: ABB, CBA, RDB
SCALE: As indicated

DETAILS

SHEET ISSUE DATE: 04/27/20

S3.1

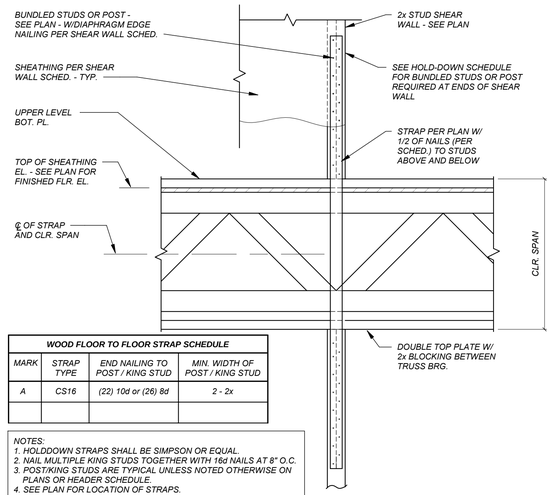

WOOD FLOOR TO FLOOR STRAP SCHEDULE			
MARK	STRAP TYPE	END NAILING TO POST / KING STUD	MIN. WIDTH OF POST / KING STUD
A	CS16	(22) 10d or (26) 8d	2 - 2x

NOTES:
1. HOLDDOWN STRAPS SHALL BE SIMPSON OR EQUAL.
2. NAIL MULTIPLE KING STUDS TOGETHER WITH 16d NAILS AT 8" O.C.
3. POST/KING STUDS ARE TYPICAL UNLESS NOTED OTHERWISE ON PLANS OR HEADER SCHEDULE.
4. SEE PLAN FOR LOCATION OF STRAPS.

TYPICAL HOLD-DOWN OR STRAP CONNECTION AT FLOOR FRAMING — 1 / S3.2
1"=1'-0"

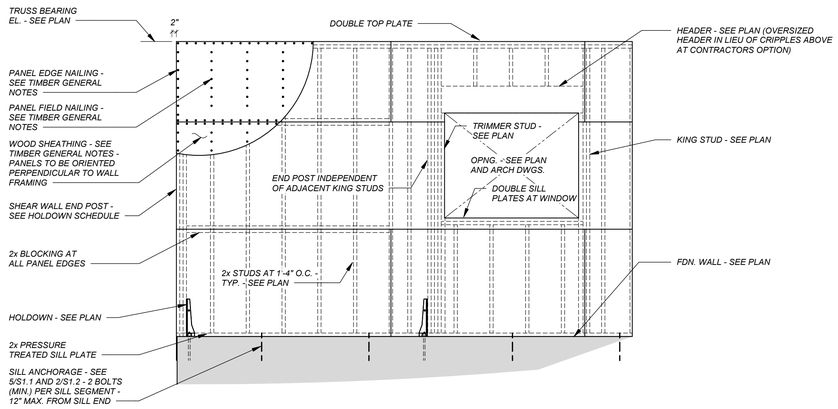

TYPICAL SHEAR WALL FRAMING ELEVATION — 2 / S3.2
3/8"=1'-0"

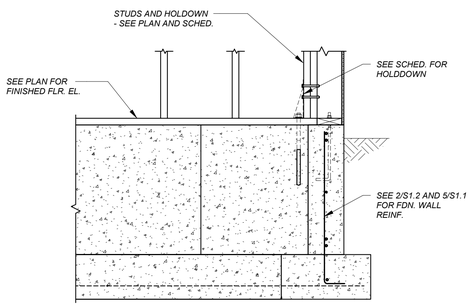

EXTERIOR FTG. AND HOLDOWN

HOLDDOWN ANCHOR ROD PLACEMENT — 3 / S3.2
3/4"=1'-0"

- HOLDOWN SHALL BE SIMPSON OR EQUAL WITH ICC APPROVAL. ALL SUBSTITUTES SHALL BE REVIEWED BY THE ENGINEER OF RECORD BEFORE INSTALLATION.
- NAIL MULTIPLE KING STUDS TOGETHER WITH 16d NAILS AT 8" O.C.
- POST/KING STUDS ARE 2 - 2x6 U.N.O. ON PLANS OR HEADER SCHEDULE.
- VERTICAL REINFORCING SHALL BE PLACED ON EACH SIDE OF HOLDOWN BOLT. VERTICAL REINFORCING SHALL HAVE STANDARD HOOKS ON EACH END.
- AT HOLDOWN ANCHOR BOLT LOCATIONS ONLY: HOLES IN SILL PLATES SHALL BE OVERSIZED. HOLDOWN ANCHOR BOLTS NEED NOT BE GALVANIZED.
- EMBED LENGTH IS BELOW CURB, SLAB OR TOP OF STEM WALL AS SHOWN. INCREASE FOOTING DEPTH AS NEEDED.
- USE SIMPSON SB OR SSTB ANCHORS PER MANUFACTURER'S RECOMMENDATIONS.

FOUNDATION HOLD DOWN SCHEDULE AT GRADE BEAMS					
MARK ON PLAN	HOLD DOWN	THREADED ROD DIAMETER	ANCHOR	BOLTS TO POST/KING STUD	MIN. WIDTH OF POST/KING STUD
B	HD3B	5/8"ø	SB5/8x24 OR SSTB16	2 - 5/8"ø	3
C	HD7B	7/8"ø	SB7/8x24 OR SSTB28	3 - 3/4"ø	3

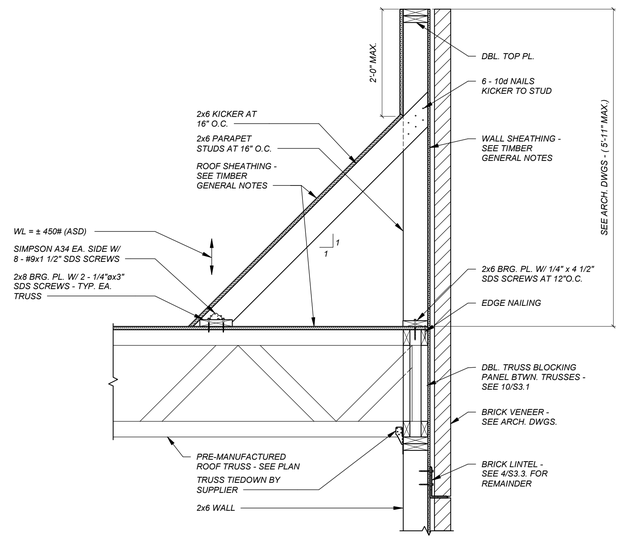

4 / S3.2 — 3/4"=1'-0"

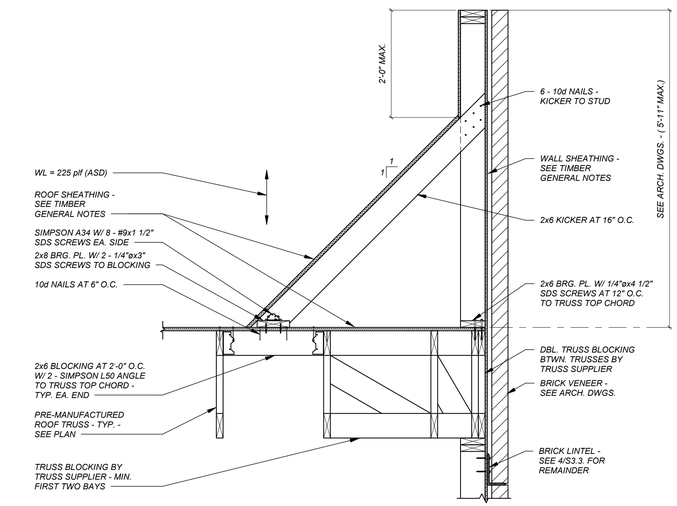

5 / S3.2 — 3/4"=1'-0"

BEARING PLATE SCHEDULE	
BEAM SIZE	BEARING PLATE SIZE
W8X24	5/8"x4 1/2"x0'-11 1/2"
W12X14	5/8"x4 1/2"x0'-9"
W14X22	3/4"x4 1/2"x0'-10"
HSS16X4	3/4"x4 1/2"x0'-9"

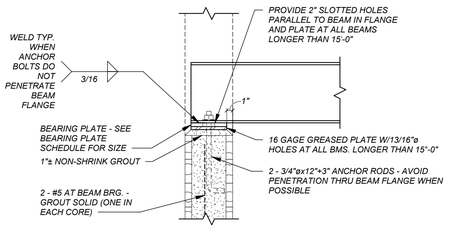

BEAM PERPENDICULAR TO WALL

TYPICAL BEAM BEARING ON MASONRY WALL DETAIL — 6 / S3.2
1"=1'-0"

- LENGTH OF PLATE TO BE PARALLEL TO WALL.
- FINGER TIGHTEN NUTS AT BEAMS W/ SLOTTED HOLES AND GREASED PLATE

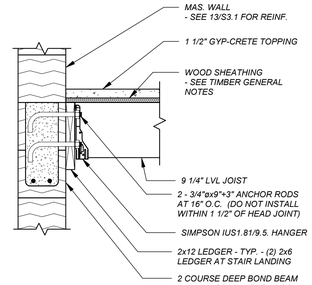

TYPICAL LEDGER DETAIL — 7 / S3.2
1"=1'-0"

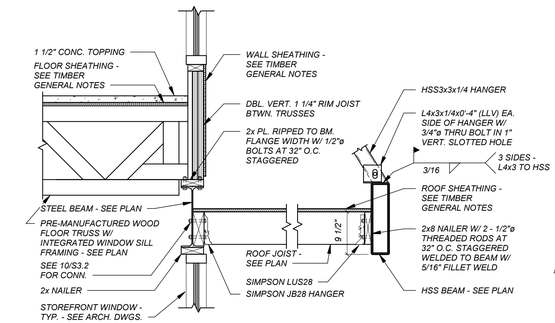

8 / S3.2 — 3/4"=1'-0"

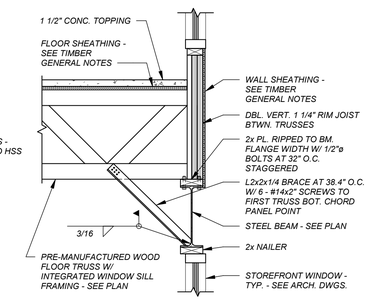

9 / S3.2 — 3/4"=1'-0"

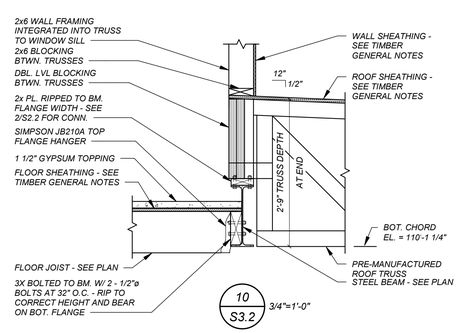

10 / S3.2 — 3/4"=1'-0"

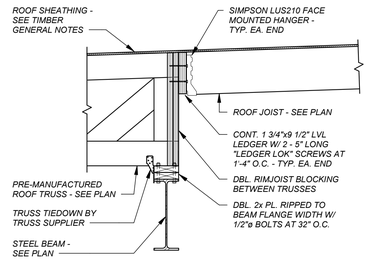

11 / S3.2 — 3/4"=1'-0"

HGF ARCHITECTS INC.

HCDA ENGINEERING, INC.
STRUCTURAL CONSULTANTS
9 SOUTH WEBER STREET
COLORADO SPRINGS, COLORADO 80903
(719)633-7784 FAX (719)471-5173

COLORADO LICENSED PROFESSIONAL ENGINEER — BRUCE D. BIRCH — 33390 — 4-27-20

PROJECT NUMBER:	19197
PHASE:	PERMIT SET
PHASE ISSUE DATE:	04/27/20
DESIGNED BY:	ABB, CBA, RDB
SCALE:	As indicated
	DETAILS
SHEET ISSUE DATE:	04/27/20

S3.2

A SUPPORTIVE HOUSING FACILITY

THE RIGHT PLACE
CARDINAL CAPITAL

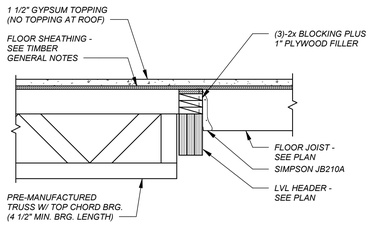

1 / S3.3 3/4"=1'-0"

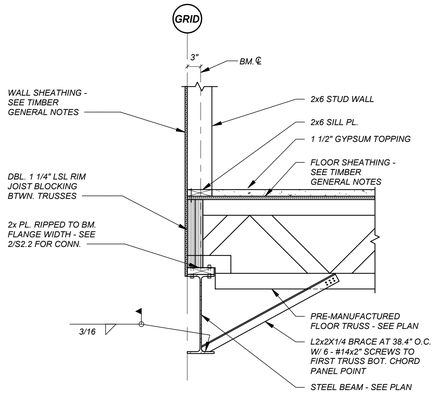

2 / S3.3 3/4"=1'-0"

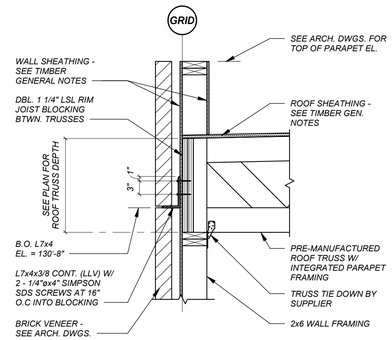

3 / S3.3 3/4"=1'-0"

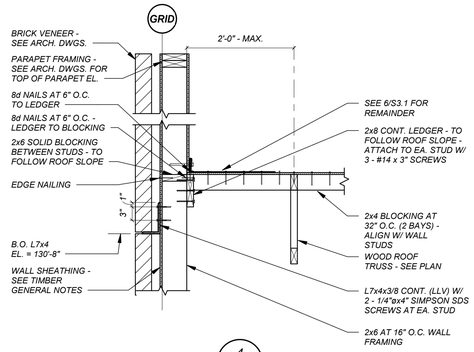

4 / S3.3 3/4"=1'-0"

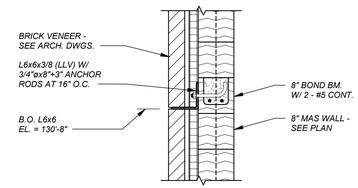

5 / S3.3 3/4"=1'-0"

HGF ARCHITECTS INC.

COLORADO LICENSED
ANDREW BRUCE BAILEY
33390
4-27-20
PROFESSIONAL ENGINEER

HCDA
HCDA ENGINEERING, INC.
STRUCTURAL CONSULTANTS
9 SOUTH WEBER STREET
COLORADO SPRINGS, COLORADO 80903
(719)633-7784 FAX (719)471-5173

PROJECT NUMBER: 19197
PHASE: PERMIT SET
PHASE ISSUE DATE: 04/27/20
DESIGNED BY: ABB, CBA, RDB
SCALE: 3/4" = 1'-0"

DETAILS

SHEET ISSUE DATE: 04/27/20

S3.3

A SUPPORTIVE HOUSING FACILITY

THE RIGHT PLACE
CARDINAL CAPITAL

2015 INTERNATIONAL ENERGY CONSERVATION CODE COMPLIANCE

C403.2.3 HVAC EQUIPMENT PERFORMANCE REQUIREMENTS. EQUIPMENT SHALL MEET THE MINIMUM EFFICIENCY REQUIREMENTS OF TABLES C403.2.3(1) THROUGH C403.2.3(9), WHEN TESTED AND RATED IN ACCORDANCE WITH THE APPLICABLE TEST PROCEDURE. PLATE-TYPE LIQUID-TO-LIQUID HEAT EXCHANGERS SHALL MEET THE MINIMUM REQUIREMENTS OF TABLE C403.2.3(10). THE EFFICIENCY SHALL BE VERIFIED THROUGH CERTIFICATION UNDER AN APPROVED CERTIFICATION PROGRAM OR, IF NO CERTIFICATION PROGRAM EXISTS, THE EQUIPMENT EFFICIENCY RATINGS SHALL BE SUPPORTED BY DATA FURNISHED BY THE MANUFACTURER. WHERE MULTIPLE RATING CONDITIONS OR PERFORMANCE REQUIREMENTS ARE PROVIDED, THE EQUIPMENT SHALL SATISFY ALL STATED REQUIREMENTS. WHERE COMPONENTS, SUCH AS INDOOR OR OUTDOOR COILS, FROM DIFFERENT MANUFACTURERS ARE USED, CALCULATIONS AND SUPPORTING DATA SHALL BE FURNISHED BY THE DESIGNER THAT DEMONSTRATES THAT THE COMBINED EFFICIENCY OF THE SPECIFIED COMPONENTS MEETS THE REQUIREMENTS HEREIN.

C403.2.9 DUCT AND PLENUM INSULATION AND SEALING. SUPPLY AND RETURN AIR DUCTS AND PLENUMS SHALL BE INSULATED WITH A MINIMUM OF R-6 INSULATION WHERE LOCATED IN UNCONDITIONED SPACES AND WHERE LOCATED OUTSIDE THE BUILDING WITH A MINIMUM OF R-8 IN CLIMATE ZONES 1 THROUGH 4 AND A MINIMUM OF R-12 FOR CLIMATE ZONES 5 THROUGH 8. WHERE LOCATED WITHIN A BUILDING ENVELOPE ASSEMBLY, THE DUCT OR PLENUM SHALL BE SEPARATED FROM THE BUILDING EXTERIOR OR UNCONDITIONED OR EXEMPT SPACES BY A MINIMUM OF R-8 INSULATION IN CLIMATE ZONES 1 THROUGH 4 AND A MINIMUM OF R-12 INSULATION IN CLIMATE ZONES 5 THROUGH 8.

C403.2.4.2.1 THERMOSTATIC SETBACK CAPABILITIES. THERMOSTATIC SETBACK CONTROLS SHALL HAVE THE CAPABILITY TO SET BACK OR TEMPORARILY OPERATE THE SYSTEM TO MAINTAIN ZONE TEMPERATURES DOWN TO 55°F (13°C) OR UP TO 85°F (29°C).

C403.2.4.2.2 AUTOMATIC SETBACK AND SHUTDOWN CAPABILITIES. AUTOMATIC TIME CLOCK OR PROGRAMMABLE CONTROLS SHALL BE CAPABLE OF STARTING AND STOPPING THE SYSTEM FOR SEVEN DIFFERENT DAILY SCHEDULES PER WEEK AND RETAINING THEIR PROGRAMMING AND TIME SETTING DURING A LOSS OF POWER FOR AT LEAST 10 HOURS. ADDITIONALLY, THE CONTROLS SHALL HAVE: A MANUAL OVERRIDE THAT ALLOWS TEMPORARY OPERATION OF THE SYSTEM FOR UP TO 2 HOURS, A MANUALLY OPERATED TIMER CAPABLE OF BEING ADJUSTED TO OPERATE THE SYSTEM FOR UP TO 2 HOURS, OR AN OCCUPANCY SENSOR.

C408.2 MECHANICAL SYSTEMS AND SERVICE WATER-HEATING SYSTEM COMMISSIONING AND COMPLETION REQUIREMENTS. PRIOR TO THE FINAL MECHANICAL AND PLUMBING INSPECTIONS, THE REGISTERED DESIGN PROFESSIONAL OR APPROVED AGENCY SHALL PROVIDE EVIDENCE OF MECHANICAL SYSTEMS COMMISSIONING AND COMPLETION IN ACCORDANCE THE PROVISIONS OF THIS SECTION. CONSTRUCTION DOCUMENT NOTES SHALL CLEARLY INDICATE PROVISIONS FOR COMMISSIONING AND COMPLETION REQUIREMENTS IN ACCORDANCE WITH THIS SECTION AND ARE PERMITTED TO REFER TO SPECIFICATIONS FOR FURTHER REQUIREMENTS. COPIES OF ALL DOCUMENTATION SHALL BE GIVEN TO THE OWNER AND MADE AVAILABLE TO THE CODE OFFICIAL UPON REQUEST IN ACCORDANCE WITH SECTIONS C408.2.4 AND C408.2.5.

C408.2.2.1 AIR SYSTEM BALANCING.
EACH SUPPLY AIR OUTLET AND ZONE TERMINAL DEVICE SHALL BE EQUIPPED WITH MEANS FOR AIR BALANCING IN ACCORDANCE WITH THE REQUIREMENTS OF CHAPTER 6 OF THE INTERNATIONAL MECHANICAL CODE. DISCHARGE DAMPERS ARE PROHIBITED ON CONSTANT VOLUME FANS AND VARIABLE VOLUME FANS WITH MOTORS 10 HP AND LARGER. AIR SYSTEMS SHALL BE BALANCED IN A MANNER TO FIRST MINIMIZE THROTTLING LOSSES THEN, FOR FANS WITH SYSTEM POWER OF GREATER THAN 1HP, FAN SPEED SHALL BE ADJUSTED TO MEET DESIGN FLOW CONDITIONS.

C408.2.5.2 MANUALS.
AN OPERATING AND MAINTENANCE MANUAL SHALL BE PROVIDED AND INCLUDE ALL OF THE FOLLOWING:

1. SUBMITTAL DATA STATING EQUIPMENT SIZE AND SELECTED OPTIONS FOR EACH PIECE OF EQUIPMENT REQUIRING MAINTENANCE.
2. MANUFACTURER'S OPERATION MANUALS AND MAINTENANCE MANUALS FOR EACH PIECE OF EQUIPMENT REQUIRING MAINTENANCE, EXCEPT EQUIPMENT NOT FURNISHED AS PART OF THE PROJECT. REQUIRED ROUTINE MAINTENANCE ACTIONS SHALL BE CLEARLY IDENTIFIED.
3. NAME AND ADDRESS OF AT LEAST ONE SERVICE AGENCY.
4. HVAC CONTROLS SYSTEM MAINTENANCE AND CALIBRATION INFORMATION, INCLUDING WIRING DIAGRAMS, SCHEMATICS, AND CONTROL SEQUENCE DESCRIPTIONS. DESIRED OR FIELD-DETERMINED SETPOINTS SHALL BE PERMANENTLY RECORDED ON CONTROL DRAWINGS AT CONTROL DEVICES OR, FOR DIGITAL CONTROL SYSTEMS, IN SYSTEM PROGRAMING INSTRUCTIONS.
5. A NARRATIVE OF HOW EACH SYSTEM IS INTENDED TO OPERATE, INCLUDING RECOMMENDED SETPOINTS.

DOCUMENTATION PER C408.2.5, 2015 IECC, WILL BE PROVIDED

ABBREVIATIONS

AAV/AV	AIR VENT
AC	AIR COMPRESSOR/ AIR CONDITIONER
ACU	AIR CONDENSING UNIT
AD	AIR DRIER
AFF	ABOVE FINISHED FLOOR
AFG	ABOVE FINISHED GRADE
AFS	AIRFLOW STATION
AHU	AIR HANDLING UNIT
AP	AIR PURIFIER
AT	AIR TANK
BCU	BATTERY COOLING UNIT
BFP	BACK FLOW PREVENTER
BOD	BOTTOM OF DUCT
CA	COMPRESSED AIR
CHWP	CHILLED WATER PUMP
CHWR	CHILLED WATER RETURN
CHWS	CHILLED WATER SUPPLY
CIRC	CIRCULATION
CRAC	COMPUTER ROOM AIR CONDITIONER
CT	COOLING TOWER
CU	CONDENSING UNIT
CUH	CABINET UNIT HEATER
D	DRAIN
DCW	DOMESTIC COLD WATER
DD	DUAL DUCT TERMINAL BOX
DDC	DIRECT DIGITAL CONTROLLER
DHW	DOMESTIC HOT WATER
DTW	DOMESTIC TEMPERED WATER
(E), EX	EXISTING
EA	EXHAUST AIR
EDH	ELECTRIC DUCT HEATER
EF/EX	EXHAUST FAN
EHC	ELECTRICAL HEATING CABINET
FB	FILTER BOX
FC	FAN COIL
G	NATURAL GAS
HWC	DOMESTIC HOT WATER RECIRCULATION
HWP	HOT WATER PUMP
HWR	HOT WATER RETURN
HWS	HOT WATER SUPPLY
MAU	MAKEUP AIR UNIT
MM	MINIMATE A/C UNIT
MR	MECHANICAL ROOM
MVD	MANUAL VOLUME DAMPER
MZU	MULTI ZONE UNIT
NA	NOT AVAILABLE
OA	OUTSIDE AIR
P	PUMP
PENT	PENTHOUSE
PWU	PACKAGED WALL UNIT
RA	RETURN AIR
RD	REFRIGERANT DISCHARGE
RF	RETURN FAN
RP	RADIANT PANEL
RR	REST ROOM
RS	REFRIGERANT SUCTION
RTU	ROOF TOP UNIT
SA	SUPPLY AIR
TA	TRANSFER AIR
TF	TRANSFER FAN
TOD	TOP OF DUCT
UH	UNIT HEATER
UNO	UNLESS NOTED OTHERWISE
VAV	VARIABLE AIR VOLUME

HVAC PIPING LEGEND

SYMBOL	ABBR.	DESCRIPTION
HWS	HWS	HOT WATER SUPPLY
HWR	HWR	HOT WATER RETURN
CHWS	CHWS	CHILLED WATER SUPPLY
CHWR	CHWR	CHILLED WATER RETURN
C	C	CONDENSER WATER SUPPLY
CR	CR	CONDENSER WATER RETURN
D	D	CONDENSATE OR EQUIPMENT DRAIN
RD	RD	REFRIGERANT DISCHARGE
RS	RS	REFRIGERANT SUCTION
		REFRIGERANT LINE SET (SUCTION AND DISCHARGE)
G	G	NATURAL GAS
CA	CA	COMPRESSED AIR
HPS	HPS	HIGH PRESSURE STEAM
HPC	HPC	HIGH PRESSURE CONDENSATE
MPS	MPS	MEDIUM PRESSURE STEAM
MPC	MPC	MEDIUM PRESSURE CONDENSATE
LPS	LPS	LOW PRESSURE STEAM
LPC	LPC	LOW PRESSURE CONDENSATE
		EXISTING PIPING
		HATCH DENOTES TO BE REMOVED
		ELBOW DOWN
		ELBOW UP
		TEE DOWN
		TEE UP
		STRAINER WITH BLOWOFF VALVE
		REDUCER
		BALL VALVE
		BUTTERFLY VALVE
		DIAPHRAGM VALVE
		GATE VALVE
		GLOBE VALVE
		ANGLE VALVE
		PLUG VALVE
		CHECK VALVE
	CBV	CALIBRATED BALANCING VALVE
S		SOLENOID ACTUATOR
M		MOTOR ACTUATOR
P		PNEUMATIC ACTUATOR
	PRV	PRESSURE REGULATING VALVE
	PSV	PRESSURE RELIEF VALVE

HVAC LEGEND

SYMBOL	DESCRIPTION
	SUPPLY DIFFUSER - FOUR WAY THROW, UNLESS NOTED OTHERWISE (UNO), OR SUPPLY (POSITIVE PRESSURE) AIR DUCT
	SUPPLY DIFFUSER WITH ROUND CONNECTION FOUR WAY THROW, UNLESS NOTED OTHERWISE (UNO)
	RETURN GRILLE OR RETURN (NEGATIVE PRESSURE) AIR DUCT
	RETURN GRILLE WITH ROUND CONNECTION
	EXHAUST GRILLE
20x12	DUCT SIZE, FIRST FIGURE IS FOR SIDE SHOWN.
20x10 15x8	TRANSITION, RECTANGULAR
10x10 8"Ø	TRANSITION, SQUARE-TO-ROUND
	ELBOW WITH TURNING VANES
	BRANCH, NO SPLITTER
MVD	ROUND SPIN-IN WITH MANUAL VOLUME DAMPER (MVD)
	PARALLEL BLADE DAMPER
	OPPOSED BLADE DAMPER
M	MOTORIZED DAMPER
FD/SD/FSD	FIRE DAMPER, FD=FIRE, SD=SMOKE, FSD=FIRE/SMOKE
2	SMOKE DETECTOR
1	FIRE (HEAT) DETECTOR
	FLEX DUCT TO DIFFUSER
P	PRESSURE SENSOR
H	HUMIDISTAT
T RTU-4	THERMOSTAT WITH EQUIPMENT CONTROLLED TAG
T	WIRED THERMOSTAT TO EQUIPMENT
T	WIRELESS THERMOSTAT TO EQUIPMENT
	CABINET EXHAUST FAN
	ROOF MOUNTED EXHAUST FAN
	AIR FLOW DIRECTION
	CONNECT NEW TO EXISTING
A ### CFM #"Ø	SUPPLY AIR DEVICE CALLOUT TOP LINE DENOTES CFM BOTTOM LINE DENOTES NECK SIZE - (SEE SCHEDULE)
A ### CFM #"Ø 3	SUPPLY AIR DEVICE CALLOUT WITH QUANTITY TOP LINE DENOTES CFM BOTTOM LINE DENOTES NECK SIZE - (SEE SCHEDULE)
A	RETURN AIR GRILLE CALLOUT (SEE SCHEDULE)
VAV 1	EQUIPMENT TAG (SEE SCHEDULE)
(E)	EXISTING
(N)	NEW
(R)	RELOCATED
SA	SUPPLY AIR
RA	RETURN AIR
OA	OUTSIDE AIR
EA	EXHAUST AIR
TA	TRANSFER AIR

MECHANICAL GENERAL NOTES (2015)

A. NOT ALL EXISTING DUCTWORK, PIPING, AND ACCESSORIES ARE NECESSARILY SHOWN ON THIS DRAWING, BUT WHAT IS DEEMED NECESSARY TO SHOW INTENT OF WORK INVOLVED IN THIS PROJECT. REFER TO ALL PLANS, SECTIONS, DETAILS, SCHEDULES, AND SPECIFICATIONS FOR COMPLETE SYSTEM REQUIREMENTS.

B. CONTRACTOR SHALL FIELD VERIFY EXISTING CONDITIONS PRIOR TO ORDERING, FABRICATION OF MATERIAL, OR PERFORMING ANY NEW WORK. DEVIATIONS FROM CONDITIONS SHOWN IN THESE PLANS SHALL BE REPORTED TO THE PROJECT MANAGER IMMEDIATELY AND NO WORK SHALL BE PERFORMED IN THIS AREA UNTIL A RESOLUTION HAS BEEN ESTABLISHED. SITE CONDITIONS DIFFERING FROM THOSE SHOWN ON THESE PLANS WILL NOT BE GENERALLY CONSIDERED A BASIS FOR CONTRACT MODIFICATION AS THE CONTRACTOR SHALL TAKE INTO ACCOUNT WORST CASE SITE CONDITIONS WHEREVER POSSIBLE.

C. COORDINATE ALL PENETRATIONS OF FLOOR, ROOF, WALLS, ETC. WITH GENERAL CONTRACTOR. ALL PENETRATIONS THROUGH FIRE/SMOKE RATED CONSTRUCTION SHALL BE SEALED WITH A FIRE RATED CAULK EQUAL TO OR EXCEEDING THE CONSTRUCTION FIRE RATING.

D. ALL NEW MATERIALS IN THE RETURN AIR PLENUM SHALL HAVE A MAXIMUM FLAME SPREAD RATING OF 25 AND A MAXIMUM SMOKE DEVELOPED RATING OF 50 IN ACCORDANCE WITH SECTION 602.2.1 OF THE 2015 INTERNATIONAL MECHANICAL CODE.

E. FLEXIBLE AIR DUCTS SHALL CONFORM TO UL181 IN ACCORDANCE WITH SECTION 603.6 OF THE 2015 INTERNATIONAL MECHANICAL CODE. LENGTH OF FLEX DUCT SHALL NOT EXCEED 5 FT.

F. ALL MECHANICAL EQUIPMENT SHALL BE LABELED AS TO THE AREA(S) SERVED IN ACCORDANCE WITH SECTION 304.12 OF THE 2015 INTERNATIONAL MECHANICAL CODE.

G. PROVIDE ACCESS DOORS OR OTHER MEANS OF APPROVED ACCESS TO ALL FIRE AND FIRE/SMOKE DAMPERS. ACCESS DOORS SHALL BE LABELED ON THE ACCESS DOOR AND ON THE CEILING BELOW.

H. PROVIDE AND INSTALL A BALANCING DAMPER AT EACH BRANCH TAKEOFF FOR THE SUPPLY AND EXHAUST AIR SYSTEMS. PROVIDE AND INSTALL A BALANCING DAMPER AT EACH BRANCH TAKEOFF FOR THE RETURN AIR SYSTEM WHERE INDICATED. BALANCING DAMPERS LOCATED ABOVE GYPSUM BOARD OR OTHER INACCESSIBLE CEILINGS SHALL BE INSTALLED WITH A CONCEALED DAMPER REGULATOR AND COVER PLATE, PAINTED TO MATCH CEILING COLOR.

I. MOUNT SPACE TEMPERATURE SENSORS, THERMOSTATS, AND REMOTE CONTROL DEVICES WITH CENTERLINE AT 48" ABOVE FINISH FLOOR (AFF) UNLESS OTHERWISE INDICATED.

J. PROVIDE BALANCE REPORT TO INSPECTOR AT TIME OF HEATING FINAL IN ACCORDANCE WITH 2015 INTERNATIONAL MECHANICAL CODE. SUBMIT TO ARCHITECT FOR FINAL APPROVAL.

K. DUCTWORK SHALL BE SEALED IN ACCORDANCE WITH THE SPECIFICATIONS AND THE 2015 EDITION OF THE INTERNATIONAL MECHANICAL CODE, SECTION 603.9.

L. DUCT SIZES SHOWN REPRESENT CLEAR INSIDE DIMENSIONS.

M. ALL RECTANGULAR DUCT ELBOWS OR CHANGES IN DIRECTION OF 45 DEGREES OR GREATER, OTHER THAN BRANCH CONNECTIONS, SHALL INCLUDE DOUBLE THICKNESS AIRFOIL SHAPED TURNING VANES.

N. UNLESS NOTED OTHERWISE, DIFFUSER/GRILLE/REGISTER NECK SIZE SHOWN ON DRAWINGS INDICATES SIZE OF DUCT TO DIFFUSER/GRILLE/REGISTER.

O. COORDINATE FINAL LOCATION OF DUCTWORK, PIPING, DIFFUSERS, ETC. WITH ALL OTHER TRADES BEFORE FABRICATION OR INSTALLATION.

P. CONTRACTOR SHALL PROVIDE ALL REQUIRED OFFSETS, TRANSITIONS, AND FITTINGS FOR DUCTWORK AND PIPING FOR COMPLETE SYSTEM.

Q. UNLESS NOTED OTHERWISE, PROVIDE BELL MOUTH SPIN-IN FITTING WITH A 2" STAND-OFF BRACKET AND LOCKING QUADRANT VOLUME DAMPER FOR ALL DIFFUSER CONNECTIONS.

R. COORDINATE LOCATION OF ALL WALL/CEILING MOUNTED DIFFUSERS AND GRILLES WITH ALL TRADES AND GENERAL CONTRACTOR.

S. PROVIDE AND INSTALL 1/4" BIRD-SCREEN ON OPENINGS FREELY COMMUNICATING WITH THE OUTDOORS.

T. FOR AIR HANDLING EQUIPMENT WITH A CAPACITY OF 2,000 CFM OR GREATER, A SMOKE DETECTOR SHALL BE INSTALLED IN THE RETURN AIR STREAM.

U. PROVIDE 115V MAINTENANCE RECEPTACLE WITHIN 25'-0" OF ROOF TOP EQUIPMENT.

V. BUILDING EXHAUST AND VENTS SHALL BE INSTALLED A MINIMUM OF 10'-0" FROM VENTILATION INTAKES.

W. AN APPROVED SEISMIC SEPARATION ASSEMBLIES SHALL BE INSTALLED WHERE HYDRONIC HVAC, PLUMBING, IRRIGATION, OR FIRE PROTECTION SPRINKLER PIPING, REGARDLESS OF SIZE, PENETRATES OR CROSSES BUILDING SEISMIC SEPARATION (EXPANSION) JOINTS AT GROUND LEVEL AND ABOVE. SEISMIC SEPARATION ASSEMBLIES SHALL CONSIST OF FLEXIBLE FITTINGS OR FLEXIBLE PIPING SO AS TO ALLOW MOVEMENT SUFFICIENT TO ACCOMMODATE CLOSING OF THE SEPARATION, OPENING OF THE SEPARATION TO TWICE ITS NORMAL SIZE, AND MOVEMENT RELATIVE TO THE SEPARATION IN ANY DIRECTION IN AN AMOUNT EQUAL TO THE SEPARATION DISTANCE. A SEISMIC SEPARATION SHALL BE SELECTED BY A CONTRACTOR ACCORDING TO THE LATEST EDITIONS OF IBC, IPC, IMC, IFC, NFPA-13, AND RULES, CODES, ORDERS, REGULATIONS, ORDINANCES, AND LAWS IMPOSED BY JURISDICTIONAL AUTHORITIES.

MECHANICAL SHEET INDEX

SHEET	TITLE
M001	MECHANICAL NOTES AND LEGEND
M002	MECHANICAL SPECIFICATIONS
M111	MECHANICAL HVAC - FIRST FLOOR PLAN
M112	MECHANICAL HVAC - SECOND FLOOR PLAN
M113	MECHANICAL HVAC - THIRD FLOOR PLAN
M114	MECHANICAL ROOF PLAN
M131	MECHANICAL GAS PLAN
M500	MECHANICAL DETAILS
M610	MECHANICAL SCHEDULES

HGF ARCHITECTS INC.

COLORADO REGISTERED
RICHARD E. LAMMEY
32686
04/27/2020
PROFESSIONAL ENGINEER

PLANT ENGINEERING CONSULTANTS
320 W FILLMORE SUITE 100 COLORADO SPRINGS CO 80907
719 473 7977
www.plantecc.com

PROJECT NUMBER: 19161
PHASE: PERMIT SET
PHASE ISSUE DATE: 04/27/2020
DESIGNED BY: RL/AO/MF
SCALE:

MECHANICAL NOTES AND LEGEND

SHEET ISSUE DATE: 04/27/2020

M001

THE RIGHT PLACE
CARDINAL CAPITAL MGMT.
A SUPPORTIVE HOUSING FACILITY

4/27/2020 4:38:05 PM james hollock
K:\Projects\19161\19161 the right place\Drawing Files\Mechanical\19161_arch01.dwg

DIVISION 23 - MECHANICAL

SECTION 23 01 00 - BASIC HVAC REQUIREMENTS

1.01 GENERAL
A. ALL PROVISIONS OF THE CONTRACT DOCUMENTS APPLY TO THE WORK OF THIS DIVISION.
B. ALL DIVISION 23 SECTIONS ARE SUBJECT TO THE PROVISIONS OF THIS SECTION.

1.02 SUMMARY OF WORK
A. WORK INCLUDED: PROVIDE ALL LABOR, MATERIALS, EQUIPMENT, AND INCIDENTAL ITEMS NECESSARY FOR COMPLETELY FINISHED AND OPERATIONAL MECHANICAL SYSTEMS. EXAMINE DOCUMENTS OF OTHER TRADES FOR ANY ADDITIONAL WORK WHICH MAY BE REQUIRED OF THE MECHANICAL CONTRACTOR.

1.03 DEFINITIONS
A. EXPOSED: EXPOSED IN MECHANICAL ROOMS OR ROOMS WITH FINISHED WALLS OR CEILINGS. DOES NOT INCLUDE EXTERIOR.
B. CONCEALED: LOCATED IN PIPE CHASES, FURRED SPACES, ATTICS, CRAWL SPACES, ABOVE SUSPENDED CEILINGS, OR ALL OTHER LOCATIONS NOT EXPOSED TO VIEW.
C. PROVIDE: FURNISHED AND INSTALL.
D. EXTERIOR: LOCATED OUTSIDE OF BUILDING ENVELOPE.

1.04 DIVISION OF RESPONSIBILITY
SPECIFICATION FORMATTING WHICH INDICATES A DIVISION IN THE MECHANICAL WORK IS FOR CONVENIENCE ONLY. IT IS NOT INTENDED TO DELINEATE LINES OF RESPONSIBILITY BETWEEN SUBCONTRACTORS AND/OR SUPPLIERS. SUCH DELINEATION RESTS ENTIRELY WITH THE CONTRACTOR.

1.05 PLANS AND SPECIFICATIONS
PLANS ARE DIAGRAMMATIC. THEY INDICATE GENERAL INTENT, DESIGN AND ARRANGEMENT OF SYSTEMS. PROVIDE ALL MINOR INCIDENTALS SUCH AS OFFSETS, FITTINGS, ETC., AS MAY BE REQUIRED EVEN THOUGH NOT SHOWN. PROVIDE ISOLATION VALVES AND UNIONS AS CALLED FOR IN THESE SPECIFICATIONS WHETHER OR NOT SHOWN ON DRAWINGS. DO NOT SCALE THE PLANS; TAKE DIMENSIONS FROM ACTUAL FIELD CONDITIONS.

1.06 CODES AND REGULATIONS
A. CONFORM TO CODES AND REGULATIONS APPLICABLE AT THE PROJECT SITE.
B. CALL FOR INSPECTIONS FROM LOCAL AUTHORITIES AS REQUIRED IF DISCREPANCIES OCCUR BETWEEN CONTRACT DOCUMENTS AND LOCAL REGULATIONS, THE MORE STRINGENT REQUIREMENT APPLIES.

1.07 FEES AND PERMITS
A. OBTAIN REQUIRED PERMITS.
B. PAY PERMIT FEES, CONSTRUCTION FEES, TAP FEES, INSPECTION FEES.
C. DEVELOPMENT FEES ARE PAID BY OWNER.

1.08 COORDINATION
A. COORDINATE WITH OTHER TRADES TO ASSURE ORDERLY PROGRESS OF THE WORK AND TO ASSURE PROPER FIT IN CONFINED SPACES.
B. REPORT TO THE ARCHITECT ANY CONSTRUCTION DEFECTS WHICH AFFECT THE MECHANICAL WORK; PROCEED WITH MECHANICAL WORK ONLY AFTER DEFECTS HAVE BEEN CORRECTED.

1.09 QUALITY ASSURANCE
A. PERFORM WORK IN ACCORDANCE WITH GOOD TRADE PRACTICE AND IN A NEAT MANNER. COMPLY WITH ARCHITECT'S DIRECTION CONCERNING FINISHED APPEARANCE.
B. ADHERE TO MANUFACTURER'S RECOMMENDATIONS.

1.10 PROTECTION
A. OF PEOPLE: ARRANGE BARRIERS, SIGNS, ETC. AS REQUIRED TO MINIMIZE THE HAZARD TO PEOPLE. COMPLY WITH APPLICABLE SAFETY AND HEALTH REGULATIONS.
B. OF WORK: TAKE ALL MEASURES NECESSARY TO PROTECT THE WORK BOTH BEFORE AND AFTER INSTALLATION, TO ASSURE THAT IT WILL BE IN CLEAN, UNDAMAGED, UNBLEMISHED CONDITION WHEN TURNED OVER TO THE OWNER. REPAIR/REPLACE WORK DAMAGED DURING CONSTRUCTION.
C. OF EXISTING MECHANICAL: PROVIDE TEMPORARY FILTERS AT ALL EXISTING RETURN AIR DEVICES AND OPENINGS DURING CONSTRUCTION.

1.11 SUBMITTALS
A. SUBMIT PRODUCT DATA FOR THE FOLLOWING ITEMS:
1. GRILLES, REGISTERS, DIFFUSERS, SPIN-IN, FLEX, DUCT INSULATION, THERMOSTAT, HVAC EQUIPMENT AND OTHER MISC HVAC ITEMS.
2. ALL PLUMBING FIXTURES, ACCESSORIES AND PIPE INSULATION.
B. SUBMIT PDF THROUGH GENERAL CONTRACTOR TO ENGINEER.

1.12 RECORD DOCUMENTS
A. MAINTAIN AT JOB SITE: CONTRACT DOCUMENTS, REVIEWED SUBMITTALS, FIELD TEST RECORDS.
B. AS-BUILT DRAWINGS: NEATLY REVISE THE DESIGN DRAWINGS TO REFLECT THE AS-BUILT CONDITION. DIMENSIONALLY LOCATE SITE UTILITIES AND UNDER SLAB WORK. DELIVER AS-BUILT DRAWINGS TO ENGINEER AT PROJECT COMPLETION.

1.13 OPERATING & MAINTENANCE MANUAL
A. FORMAT: PDF
B. CONTENTS: EACH SECTION SET OFF BY INDEX TABS. INCLUDE:
1. TABLE OF CONTENTS.
2. EXECUTED WARRANTIES.
3. NAME, ADDRESS AND TELEPHONE NUMBER OF INSTALLING CONTRACTORS AND SUBCONTRACTORS, ALONG WITH BRIEF DESCRIPTION OF THEIR PROJECT RESPONSIBILITY.
4. NAME, ADDRESS AND TELEPHONE NUMBER OF MATERIAL AND EQUIPMENT SUPPLIERS, ALONG WITH LISTING OF ITEMS SUPPLIED.
5. EQUIPMENT TABS, MINIMUM ONE TAB FOR EACH APPLICABLE DIVISION 23 SECTION, ARRANGED IN THE SAME ORDER AS THE SPECIFICATIONS. INCLUDE FOR ALL EQUIPMENT SUPPLIED:
A. REVIEWED SUBMITTALS.
B. INSTALLATION INSTRUCTIONS.
C. OPERATING INSTRUCTIONS
D. MAINTENANCE INSTRUCTIONS.
E. PARTS LISTS.
F. TEST AND BALANCE REPORT.
G. CERTIFICATES OF INSPECTION
C. AT PROJECT COMPLETION SUBMIT ONE COPY OF MANUAL TO ENGINEER FOR REVIEW. MAKE ANY CORRECTIONS REQUIRED. TRANSMIT THREE CORRECTED COPIES TO GENERAL CONTRACTOR FOR DELIVERY TO OWNER.

1.14 WARRANTIES
A. PROVIDE ONE (1) YEAR WARRANTY ADDRESSED TO OWNER COVERING ALL DIVISION 23 WORK. PROVIDE ADDITIONAL FOUR (4) YEAR WARRANTY COVERING ALL REFRIGERANT COMPRESSORS.
B. INCLUDE EXECUTED WARRANTIES IN OPERATING & MAINTENANCE MANUALS.
C. DURING WARRANTY PERIOD, PROVIDE LABOR AND MATERIALS, INCLUDING SHIPPING, TO REPAIR OR REPLACE DEFECTS IN DIVISION 23 WORK. PAY FOR DAMAGE TO OTHER WORK RESULTING FROM DEFECTS IN DIVISION 23 WORK.

1.15 DEMONSTRATIONS
A. CONDUCT DEMONSTRATIONS WHEN SYSTEMS ARE COMPLETE AND OPERATIONAL AND READY TO BE TURNED OVER TO THE OWNER, AND AFTER THE OPERATING AND MAINTENANCE MANUAL IS COMPLETE.
B. INSTRUCT THE OWNER'S REPRESENTATIVE ONCE ON THE PROPER OPERATION AND MAINTENANCE OF THE MECHANICAL SYSTEMS. PAY PARTICULAR ATTENTION TO NORMAL AND EMERGENCY START-UP AND SHUT-DOWN PROCEDURES, SEASONAL CHANGE OVER, SAFETY DEVICES, AND TEMPERATURE CONTROL SYSTEMS.

END OF SECTION 23 01 00

SECTION 23 05 00 - BASIC MATERIALS AND METHODS

PART 1 GENERAL
1.01 WORK INCLUDED
THIS SECTION DESCRIBES MATERIALS AND METHODS COMMON TO THE WORK IN GENERAL FOR DIVISION 23.

PART 2 PRODUCTS
2.01 MOTORS, STARTERS, MISC. ELECTRICAL
A. MOTORS: MINIMUM HORSEPOWER AS INDICATED HEREIN OR ON DRAWINGS, CONSTRUCTED FOR OPERATION AT SITE ALTITUDE, RUST PROOF/LEAK PROOF BEARING RINGS, BUILT TO NEMA STANDARDS, FACTORY BALANCED, OPEN DRIP PROOF, THERMAL OVERLOAD PROTECTED, 1.15 SERVICE FACTOR AT ALTITUDE, POWER FACTOR CORRECTED IN ACCORDANCE WITH APPLICABLE ENERGY CODE, SUITABLE FOR OPERATION ON VOLTAGE INDICATED.

SECTION 23 05 00 - BASIC MATERIALS AND METHODS (cont'd)

B. STARTERS: STARTERS OR SMALL MOTORS WITHOUT STARTERS SHALL HAVE THERMAL OVERLOAD PROTECTION IN EACH PHASE. ALL MAGNETIC STARTERS SHALL BE FURNISHED WITH TRANSFORMERS THAT PROVIDE 120V CONTROL VOLTAGE UNLESS ESTABLISHED BY OTHER MEANS. STARTERS SHALL INCLUDE TWO SETS OF AUXILIARY CONTACTS.

2.02 PIPE SCHEDULE
A. GENERAL: ALL EXTERIOR EXPOSED GAS PIPING SHALL BE PAINTED.
B. WATER: COPPER TUBING PER ASTM B88, TYPE L, HARD DRAWN ABOVEGROUND AND ASTM B42, TYPE K UNDERGROUND. GRADE 95TA SOLDER JOINTS ABOVEGROUND AND AWS A5.8 SILVER BRAZED UNDERGROUND. CROSS-LINKED POLYETHYLENE PIPE (PEX) ASTM F876 OR F877.
C. HYDRONIC: 2" AND SMALLER COPPER TUBING SAME AS FOR WATER OR STEEL PIPE ASTM A53 SCH. 40 WITH ASME B16.3 MALLEABLE IRON OR ASTM A234 FORGED STEEL THREADED FITTINGS. PROVIDE DIELECTRIC UNIONS FOR DISSIMILAR METALS.
D. NATURAL GAS: STEEL PIPE, ASTM A53 SCH. 40 WITH ASME B16.3 MALLEABLE IRON OR ASTM A234 FORGED STEEL THREADED OR WELDED FITTINGS.
E. REFRIGERANT: COPPER ACR TUBING ASTMB280, NITROGENIZED, TYPE L, HARD DRAWN.

2.03 PIPE HANGERS AND SUPPORTS
A. INSERTS: STEEL CASE AND EXPANDER PLUG FOR THREADED CONNECTION WITH LATERAL ADJUSTMENT, TOP SLOT FOR REINFORCING RODS AND LUGS FOR ATTACHING TO FORMS. SIZE TO MATCH HANGER ROD.
B. EXPANSION ANCHORS: LEAD SHIELD OR SLIDING EXPANSION TYPE WITH MACHINE BOLT. SIZE TO MATCH HANGER ROD.
C. BEAM CLAMPS: STEEL WITH CLAMPING BOLT AND JAMB NUT, CONFIGURED TO ATTACH SECURELY TO BEAM.
D. CLIP ANGLES: SHORT SECTION OF STEEL ANGLE WITH SUITABLE FASTENERS.
E. HANGER RODS: STEEL ALL-THREAD.
F. HANGERS:
1. INDIVIDUAL HANGERS: ADJUSTABLE WROUGHT STEEL RING FOR PIPING THROUGH 1-1/2". ADJUSTABLE WROUGHT STEEL CLEVIS FOR PIPING 2" AND LARGER. CHAIN OR PERFORATED STRAP HANGERS NOT PERMITTED.
2. TRAPEZE: INVERTED STEEL CHANNELS WITH WELDED PIPE SPACERS. PIPING MAY REST DIRECTLY ON TRAPEZE. SIZE HANGER RODS ONE SIZE LARGER THAN REQUIRED FOR LARGEST PIPE ON TRAPEZE. UNIFORMLY SPACE HANGER RODS MAXIMUM 3' ON CENTER. LOCATE PIPING ON TRAPEZE TO ALLOW FOR INSULATION AND THERMAL EXPANSION. SEE SECTION 23 07 00 - INSULATION.
G. WALL SUPPORTS: CAST IRON HOOK FOR PIPING THROUGH 3". WELDED STEEL WALL BRACKET WITH WROUGHT STEEL CLAMP FOR CLEVIS FOR PIPING 4" TO 6". SIZE IN ACCORDANCE WITH CODE AND TO ALLOW FOR INSULATION. SEE SECTION 23 07 00 - INSULATION.
H. RISER CLAMPS: STEEL, BOLT-TOGETHER, WITH SUPPORTING TABS. SIZE FOR UNINSULATED PIPE.
I. FLOOR STANDS:
1. BASE: CONCRETE PIER OR STEEL SUPPORT.
2. STAND: CAST IRON ADJUSTABLE SADDLE WITH PIPE NIPPLE RISER, LOCKNUT AND FLOOR FLANGE FOR PIPING THROUGH 5". ADJUSTABLE STEEL STAND AND CAST IRON ROLLER FOR PIPING 6" AND LARGER. SIZE IN ACCORDANCE WITH CODE AND TO ALLOW FOR INSULATION. SEE SECTION 23 07 00 - INSULATION.
J. MATERIALS: METALLIC PIPE HANGERS SHALL BE OF SAME MATERIAL AS BASE METAL OF PIPE OR INSTALL WEAR PADS FOR DISSIMILAR METALS.

2.04 SLEEVES, SAFING, AND ESCUTCHEONS
A. SLEEVES:
1. ROUND: STEEL PIPE SIZED LARGE ENOUGH TO ALLOW FOR UNINTERRUPTED INSULATION AND FOR MOVEMENT.
2. RECTANGULAR: GALVANIZED STEEL, REINFORCED TO PREVENT DEFORMATION.
B. SAFING:
1. WATERPROOF: ELASTIC MASTIC, SILICONE, ETC.
2. FIREPROOF: PLASTER, GROUT, OTHER MATERIAL AS APPROVED BY LOCAL AUTHORITIES.
C. ESCUTCHEONS
1. PIPING: ADJUSTABLE CHROME-PLATED, SOLID OR SPLIT, FLAT OR DISHED TO SUIT THE APPLICATION.
2. DUCTWORK: FABRICATED SHEET METAL.

2.05 VALVES
A. ACCEPTABLE MANUFACTURERS: CRANE, HAMMOND, JENKINS, KENNEDY, NIBCO, POWELL, STOCKHAM, GRINNELL.
B. GENERAL: ALL VALVES OF THE SAME TYPE SHALL BE OF ONE MANUFACTURER. USE VALVES LISTED WITH THE MANUFACTURERS STANDARDIZATION SOCIETY OF THE VALVE AND FITTING INDUSTRY.
C. ISOLATION VALVES:
1. 2" AND SMALLER: BALL VALVE; BRONZE, SWING-AWAY DESIGN, FULL PORT, BRONZE BALL, TEFLON SEAT, LEVER OPERATOR, SCREWED OR SOLDERED ENDS, 150# WSP, 300# WOG.
2. 2-1/2" AND LARGER: BUTTERFLY VALVE; MSS SP67, 200 PSI, DUCTILE IRON BODY WITH 2" EXTENSION TO ACCOMMODATE INSULATION, LUG OR WAFER BODY STYLE, STAINLESS STEEL STEM, LEVER-LOCK OPERATOR, EPDM SEALS.
D. CHECK VALVES:
1. SWING CHECK 4" AND SMALLER: BRONZE, SCREWED BONNET, HORIZONTAL SWING DISC, RENEWABLE DISC AND SEAT, SOLDER OR SCREWED ENDS, 150# WSP, 300# WOG.
E. BALANCING VALVES:
1. 2" AND SMALLER: PLUG COCKS OR ECCENTRIC VALVES OR BALL VALVES.
2. ALL SIZES: WITH ADJUSTABLE MEMORY STOP.
F. DRAIN VALVES:
1. BRONZE, COMPRESSION STOP WITH NIPPLE AND CAP OR HOSE THREAD OUTLET, 125# WSP.
G. GAS PLUG VALVES:
1. UNDER 2-1/2": CAST IRON BODY, 150 #, BUILT IN STOP.
2. 2-1/2" AND LARGER: MSS SP-78, 150 #, CWP, CAST IRON BODY AND PLUG, PRESSURE LUBRICATED, TEFLON OR BUNA N PACKING.

2.06 UNIONS
A. FERROUS PIPING
1. 2" AND SMALLER: 150# MALLEABLE IRON GROUND JOINT, THREADED ENDS.
2. 2-1/2" AND LARGER: GRADE 1 150# FORGED STEEL SLIP ON OR WELD-NECK FLANGES IN ACCORDANCE WITH ASTM 181, REGULAR SQUARE-HEAD MACHINE BOLTS WITH HEAVY HEXAGONAL NUTS IN ACCORDANCE WITH ASTM A307 GRADE B, 1/16" THICK PRE-FORMED SYNTHETIC GASKETS.
B. COPPER PIPING
1. 2" AND SMALLER: WROUGHT COPPER IN ACCORDANCE WITH ANSI B16.22.
2. 2-1/2" AND LARGER: 150# BRONZE FLANGES, 1/16" THICK PRE-FORMED SYNTHETIC GASKETS.
C. DIELECTRIC UNIONS:
1. UNION WITH GALVANIZED OR PLATED STEEL THREADED END, COPPER SOLDER END, WATER IMPERVIOUS ISOLATION BARRIER.

2.07 PIPING SPECIALTIES
A. PRESSURE AND TEMPERATURE RELIEF VALVES
1. ACCEPTABLE MANUFACTURERS: WATTS, CRANE, CASH/ACME.
2. DESCRIPTION: ASME STAMPED, SUITABLY SIZED AND RATED TO PROTECT THE INTENDED SYSTEM AND EQUIPMENT.
B. THERMOMETERS
1. ACCEPTABLE MANUFACTURERS: SIKA, MOELLER, WEKSLER, WIKA.
2. DESCRIPTION: METAL CASE WITH COLORED-ALCOHOL FILLED GLASS OR PLASTIC READING TUBE WITH SUITABLE 9° SCALE, ADJUSTABLE MULTI-ANGLE HOUSING, BRASS SEPARABLE SOCKET.
C. EXPANSION TANK
1. ACCEPTABLE MANUFACTURERS: AMTROL, ITT BELL & GOSSETT, TACO.
2. DESCRIPTION: ASME STAMPED, WELDED STEEL WITH FLEXIBLE EPDM DIAPHRAGM OR BLADDER SEALED INTO TANK.
D. AIR SEPARATORS
1. ACCEPTABLE MANUFACTURERS: ARMSTRONG, ITT BELL & GOSSETT, TACO.
2. DIP TUBE FITTINGS: RATED AT 125 PSI OPERATING PRESSURE.
3. IN-LINE AIR SEPARATORS: CAST IRON OR STEEL, ASME STAMPED, 125 PSI OPERATING PRESSURE.
E. AIR VENTS
1. ACCEPTABLE MANUFACTURERS: ARMSTRONG, ITT BELL & GOSSETT, TACO.
2. MANUAL TYPE: VERTICAL PIPE TO FORM AIR CHAMBER WITH BRASS NEEDLE VALVE AT TOP OF CHAMBER.
3. FLOAT TYPE: BRASS OR SEMI-STEEL BODY, WITH FLOAT VALVE AND SEAT; SUITABLE FOR OPERATING TEMPERATURE AND PRESSURE; WITH ISOLATING VALVE.
4. WASHER TYPE: BRASS WITH HYGROSCOPIC FIBER DISCS, VENT PORTS, ADJUSTABLE CAP FOR MANUAL SHUT-OFF AND INTEGRAL SPRING LOADED BALL CHECK VALVE.

PART 3 - EXECUTION

3.01 MOTORS, STARTERS, AND MISC. ELECTRICAL PROVIDE MOTORS OF MINIMUM HORSEPOWER INDICATED, COMPLETE WITH STARTERS,AND ACCESSORIES AS REQUIRED.

SECTION 23 05 00 - BASIC MATERIALS AND METHODS (cont'd)

3.02 PIPE HANGERS, SUPPORTS
A. GENERAL: ADEQUATELY SUPPORT PIPING FROM BUILDING STRUCTURE, TO MAINTAIN REQUIRED GRADES, TO PREVENT SAGGING. SUPPORT PIPING INDEPENDENTLY OF EQUIPMENT SO ITS WEIGHT WILL NOT BE SUPPORTED BY THE EQUIPMENT. PROVIDE SWAY BRACING WHERE NECESSARY. ISOLATE HANGERS AND SUPPORTS COMING IN CONTACT WITH BARE COPPER PIPE; USE DIELECTRIC HANGER CONNECTORS OR WRAP WITH NON-CONDUCTIVE TAPE.
B. HANGER SPACING:
1. SPACING SHALL BE IN ACCORDANCE WITH IMC TABLE 305.4
2. TO PROVIDE 1/2" MINIMUM CLEARANCE BETWEEN INSULATION AND ADJACENT WORK.
3. SUPPORT HORIZONTAL CAST IRON PIPING NEAR EACH JOINT, MAXIMUM 5' ON CENTER.
4. SUPPORT VERTICAL CAST IRON PIPING AT EACH FLOOR INDEPENDENTLY OF CONNECTING HORIZONTAL PIPING WHERE PRACTICAL.
C. INSERTS: USE FOR CAST-IN-PLACE CONCRETE. SET IN PLACE PRIOR TO CONCRETE POUR. ATTACH INSERT TO RE-BAR IF INSERT WILL CARRY PIPING 4" AND OVER. WHERE CONCRETE WILL REMAIN EXPOSED, FINISH INSERTS FLUSH WITH EXPOSED SURFACE.
D. EXPANSION ANCHORS: USE FOR PRECAST AND EXISTING CONCRETE. DRILL APPROPRIATE SIZE HOLE AND SECURELY SET ANCHOR. DO NOT CUT STRESSED CONCRETE REINFORCING. WHERE ARCHITECT ALLOWS, MAY DRILL THROUGH CONCRETE SLAB FROM BELOW AND PROVIDE HANGER ROD WITH RECESSED SQUARE STEEL PLATE AND NUT ABOVE SLAB.
E. BEAM CLAMPS: USE FOR STEEL BEAMS AND JOISTS, CLAMPED IN PLACE.
F. CLIP ANGLES: USE FOR STEEL BEAMS, WELDED IN PLACE. USE FOR WOOD BEAMS AND JOISTS, THROUGH-BOLTED IN PLACE WITH BACKER PLATE AND LOCK NUT.
G. HANGER RODS: SUSPENDED FROM INSERTS AND ANCHORS WITH JAMB NUT. SUSPENDED FROM CLAMPS AND ANGLES WITH TOP AND BOTTOM LOCK NUTS.
H. HANGERS: SUSPEND WITH ROD SIZE WITH TOP AND BOTTOM LOCK NUTS. ALLOW FOR AT LEAST 1-1/2" VERTICAL ADJUSTMENT.
I. WALL SUPPORTS: SECURELY ATTACH TO WALL USING INSERTS, EXPANSION ANCHORS, BOLTS, ETC. AS SUITS THE APPLICATION AND TO ASSURE A PERMANENT FASTENING.
J. RISER CLAMPS: LOCATE AT EACH FLOOR FOR RISERS WHICH EXTEND THROUGH MORE THAN ONE FLOOR AND FOR PIPING WHICH IS NOT ADEQUATELY SUPPORTED FROM BELOW.
K. FLOOR STANDS: USE FOR HORIZONTAL PIPING SUPPORTED FROM THE FLOOR. PROVIDE GENERAL CONTRACTOR WITH ANCHOR BOLTS AND SETTING TEMPLATES FOR CONCRETE PIERS.

3.03 SLEEVES, SAFING, AND ESCUTCHEONS
A. MAKE PENETRATIONS THROUGH BUILDING ELEMENTS AS FOLLOWS:
1. NEW CONCRETE: USE INDIVIDUAL SLEEVES CAST IN PLACE. ONLY ONE PIPE OR DUCT TO A SLEEVE; MULTIPLE PIPES/DUCTS IN A SLEEVE NOT ALLOWED. EXTENDED FLOOR SLEEVES 2" ABOVE FINISHED FLOOR, NOTCHED AS REQUIRED FOR RISER CLAMPS. CUT WALL SLEEVES FLUSH WITH WALL.
2. PRE-CAST AND EXISTING CONCRETE, SLEEVES NOT REQUIRED. SAW CUT OR CORE DRILL CONCRETE AS IN ACCORDANCE WITH CUTTING AND PATCHING HEREIN.
3. NEW MASONRY: SAME AS NEW CONCRETE.
4. EXISTING MASONRY: SAME AS EXISTING CONCRETE.
5. FRAME: SAME AS EXISTING CONCRETE.
B. PROVIDE SAFING IN ANNULAR SPACE BETWEEN PIPE/DUCT/INSULATION AND SLEEVE/OPENING AS FOLLOWS:
1. FOR UN-RATED CONCRETE FLOORS AND FOUNDATION WALLS USE WATERPROOF TYPE.
2. FOR FIRE-RATED CONSTRUCTION USE FIREPROOF TYPE FOR FULL THICKNESS OF THE CONSTRUCTION.
C. PROVIDE ESCUTCHEONS FOR PIPES AND DUCTS PASSING THROUGH WALLS, FLOORS AND CEILINGS IN FINISHED AREAS. PROVIDE TO COMPLETELY CONCEAL THE PENETRATION, TO BUTT TIGHTLY AGAINST THE WALL/FLOOR/CEILING AND THE PIPE/DUCT, AND TO YIELD A NEATLY FINISHED APPEARANCE. INSTALL PLATED ESCUTCHEONS AFTER WALL/FLOOR/CEILING HAS BEEN PAINTED.

3.04 VALVES
A. ORIENTATION: INSTALL WITH STEMS UPRIGHT OR HORIZONTAL, NOT INVERTED. INSTALL SWING CHECKS HORIZONTALLY OR IN UPFLOW VERTICAL PIPING, NOT DOWNFLOW VERTICAL.
B. SHUT-OFF AND ISOLATION: PROVIDE WHERE SHOWN, AT INLET AND OUTLET TO EACH PIECE OF EQUIPMENT, TO ISOLATE MAJOR HORIZONTAL BRANCHES, AT BASE OF VERTICAL RISERS. MAY OMIT WHERE BALANCING VALVE CAN BE USED FOR SHUT-OFF.
C. BALANCING: PROVIDE BALANCING VALVES WHERE SHOWN.
D. DRAINS: PROVIDE WHERE SHOWN, AT MAIN SHUT-OFF VALVES, AT LOW POINTS OF PIPING AND EQUIPMENT, TO ASSURE COMPLETE SYSTEM DRAIN-DOWN. LOCATE AT ACCESSIBLE POINTS WITHIN THE PIPING SYSTEM. USE DRAIN VALVES.

3.05 UNIONS
A. PROVIDE WHERE SHOWN, AT ALL EQUIPMENT AND CONTROL VALVE CONNECTIONS, FOR CONNECTION TO OTHER ITEMS REQUIRING REMOVAL FOR SERVICE/REPLACEMENT.
B. PROVIDE DIELECTRIC TYPE AT JUNCTIONS OF DISSIMILAR METALS.

3.06 PIPING SPECIALTIES
A. PRESSURE AND TEMPERATURE RELIEF VALVES: PROVIDE WHERE SHOWN AND TO ADEQUATELY PROTECT FIRED AND UNFIRED PRESSURE VESSELS AND PIPING SYSTEMS DESIGNED FOR OPERATION AT REDUCED PRESSURE. PIPE DISCHARGE TO A SAFE LOCATION. DO NOT PROVIDE ISOLATION VALVE BETWEEN RELIEF VALVE AND SYSTEM BEING PROTECTED.
B. THERMOMETERS: PROVIDE WHERE SHOWN, AT INLET AND OUTLET TO ALL FIRED PRESSURE VESSELS EXCEPT RESIDENTIAL-SIZED DOMESTIC WATER HEATERS, AT OUTLET FROM DOMESTIC WATER STORAGE TANKS AND STORAGE WATER HEATERS. AT PRIMARY AND SECONDARY INLET AND OUTLET TO CONVERTERS AND HEAT EXCHANGERS, DOWNSTREAM OF MAJOR MIXING VALVES. OMIT ON STEAM AND CONDENSATE SYSTEMS.

3.07 PIPE INSTALLATION
A. LOCATION: ROUTE PIPING GENERALLY AS INDICATED, PARALLEL WITH BUILDING ELEMENTS, IN AN ORDERLY MANNER. LOCATE CONCEALED UNLESS INDICATED OTHERWISE. ARRANGE TO CONSERVE HEADROOM AND TO CLEAR DOORS, WINDOWS AND OTHER OPENINGS.
B. INSTALLATION: INSTALL WITHOUT SPRING OR FORCING UNLESS COLD-SPRINGING IS INDICATED. MAKE CHANGES IN DIRECTION WITH FITTINGS. PROVIDE NECESSARY OFFSETS TO ACCOMMODATE OTHER WORK AND AS REQUIRED FOR EQUIPMENT FIT-UP. REAM AND CLEAN PRIOR TO JOINING. CAP OPEN ENDS TO PREVENT ENTRANCE OF FOREIGN MATERIAL.
C. GRADES: SLOPE ALL PIPING TO ALLOW FOR DRAINAGE, MINIMUM 1" IN 40' OR AS PRESCRIBED BY CODE OR SPECIFIED IN OTHER DIVISION 23 SECTIONS.
D. DRAINS: PROVIDE AT LOW POINTS IN WATER PIPING.
E. CLEARANCES: ALLOW FOR APPLICATION OF INSULATION AND FOR ACCESS TO VALVES, VENTS, DRAINS AND UNIONS. ALLOW FOR MINIMUM 1/2" CLEARANCE BETWEEN PIPES AFTER INSTALLATION.
F. BUILDING SETTLEMENT: PROVIDE SWING JOINTS AS NECESSARY TO PERMIT FREE BUILDING MOVEMENT WITHOUT CAUSING UNDUE PIPE STRESS OR DAMAGE TO BUILDING. PAY PARTICULAR ATTENTION TO PIPING CROSSING BUILDING EXPANSION JOINTS AND TO PIPING PENETRATING FLOORS, FOUNDATIONS, AND ROOF.
G. CONNECTIONS:
1. COPPER: SWEAT OR BRAZED AS IN ACCORDANCE WITH APPLICABLE DIVISION 23 SECTIONS.

3.08 PIPE TESTING
A. NEW PIPING: TEST ALL PIPING INSTALLED UNDER DIVISION 23. CONDUCT TESTS PRIOR TO CONCEALMENT OR INSULATING. NOTIFY ARCHITECT PRIOR TO CONDUCTING TESTS, TO ALLOW HIM TO OBSERVE TEST. PROVIDE ALL INSTRUMENTS AND EQUIPMENT REQUIRED TO CONDUCT TESTS. SEE APPROPRIATE DIVISION 23 SECTIONS FOR TESTING SPECIFICS AND PRESSURES.
B. EXISTING PIPING: ISOLATE FROM TEST PRESSURES USING ISOLATING VALVES, BLIND FLANGES, ETC. REPAIR ANY EXISTING PIPING DAMAGED DURING TESTING.
C. FIXTURES, EQUIPMENT: ISOLATE FROM TEST PRESSURES IF SUCH PRESSURE MAY DAMAGE THE FIXTURE/EQUIPMENT. USE ISOLATION VALVES, CAPS, ETC.
D. DURATION: HOLD HYDROSTATIC TESTS FOR 15 MINUTES MINIMUM WITHOUT PRESSURE LOSS. HOLD AIR TESTS FOR 15 MINUTES MINIMUM WITHOUT SIGNIFICANT PRESSURE LOSS. AIR TEST MAY BE SUBSTITUTED FOR HYDROSTATIC TEST IF APPROVED BY ARCHITECT.
D. RE-TESTING: CORRECT ANY WORK FAILING THE INITIAL TEST. RE-TEST IN ACCORDANCE WITH INITIAL TEST PROCEDURES.
E. FIELD RECORDS: MAINTAIN FOR ALL TESTS. SUBMIT TO ARCHITECT IN TRIPLICATE.

SECTION 23 05 00 - BASIC MATERIALS AND METHODS (cont'd)

3.09 PIPE FLUSHING
FLUSH OR ROD OUT PIPING PRIOR TO MAKING FINAL CONNECTIONS, TO ASSURE REMOVAL OF FOREIGN MATERIAL. PROVIDE TEMPORARY CONNECTIONS, VALVES, ETC. AS MAY BE REQUIRED FOR THIS PURPOSE.

3.10 FLASHING AND COUNTERFLASHING
ROOF PENETRATIONS: FLASH AND COUNTERFLASH ROOF PENETRATION IN ACCORDANCE WITH ROOFING MANUFACTURER'S RECOMMENDATIONS.

3.11 CUTTING AND PATCHING
E. GENERAL: PERFORM AS REQUIRED FOR DIVISION 23 WORK. KEEP TO A MINIMUM THROUGH PROPER SCHEDULING. WHERE UNAVOIDABLE, PERFORM IN ACCORDANCE WITH APPLICABLE DIVISIONS. SEE DIVISION 1.
F. CUTTING: OBTAIN ARCHITECT'S APPROVAL PRIOR TO CUTTING OR DRILLING TO STRUCTURAL ELEMENTS. USE SAW OR ROTARY DRILL: DO NOT USE PNEUMATIC HAMMER.
G. PATCHING: SEAL OPENINGS, REPAIR, REFINISH, RESTORE DAMAGED ELEMENTS TO ORIGINAL CONDITIONS. COMPLY WITH PROVISIONS OF APPLICABLE DIVISIONS.

3.12 ACCESS PANELS
FURNISH IN ACCORDANCE WITH DIVISION 8 AND WITH FIRE RATING COMPATIBLE WITH CEILING OR PARTITION RATING. FURNISH WHERE INDICATED AND AT LOCATIONS WHERE REQUIRED FOR ACCESS TO CONCEALED VALVES, DAMPERS, CLEANOUTS, CONTROL DEVICES, EQUIPMENT, OTHER ITEMS REQUIRING SERVICE/MAINTENANCE. DELIVER TO GENERAL CONTRACTOR FOR INSTALLATION UNDER OTHER DIVISIONS. PROVIDE INSTRUCTIONS FOR LOCATION.

3.13 ITEMS FURNISHED BY OTHERS
INSTALL IN ACCORDANCE WITH MANUFACTURES' DIRECTIONS AND AS REQUIRED BY APPLICABLE DIVISION 23 SECTIONS.

END OF SECTION 23 05 00

SECTION 23 07 00 - INSULATION

PART 1 - GENERAL

1.01 WORK INCLUDED
PROVIDE INSULATION AS SHOWN AND SPECIFIED HEREIN.

1.02 QUALITY ASSURANCE
A. FIRE HAZARD CLASSIFICATION: TESTED AS A COMPOSITE IN ACCORDANCE WITH ASTM E84 OR NFPA 255 OR UL723 AND SO LABELED. MAXIMUM FLAME SPREAD = 25, MAXIMUM SMOKE DEVELOPED = 50.
B. ENERGY CONSERVATION: COMPLY WITH 2015 INTERNATIONAL ENERGY CONSERVATION CODE.
C. PROHIBITED MATERIALS: PRODUCTS OR MATERIALS CONTAINING ASBESTOS ARE EXPRESSLY PROHIBITED.

PART 2 - PRODUCTS

2.01 PIPE INSULATION - MATERIALS
A. ACCEPTABLE MANUFACTURERS: MANVILLE, CERTAINTEED, OWENS-CORNING, AND ARMSTRONG.
B. FIBERGLASS: ASTM C547 TYPE 1. MAXIMUM K/INCH = 0.27 AT MEAN TEMPERATURE OF 75 DEGREES F. ALL SERVICE JACKET WITH SELF-SEALING LAPS. PRE-MOLDED FITTING AND VALVE COVERS WITH FIBERGLASS INSERTS.

2.02 DUCT INSULATION - MATERIALS
A. ACCEPTABLE MANUFACTURERS: CERTAIN TEED, JOHNS MANVILLE, KNAUF, AND OWENS CORNING.
B. WRAP (UNCONDITIONED SPACES): MINERAL-FIBER BLANKET IN ACCORDANCE WITH ASTM C553, TYPE I, 2" THICK, MIN. R-6 PER 2015 IECC. 0.75 LB/FT3 DENSITY WITH K=0.29. FSK FACING.
C. WRAP (SUPPLY IN PLENUM): MINERAL-FIBER BLANKET IN ACCORDANCE WITH ASTM C553, TYPE I, 2" THICK, MIN. R-4.2. 0.75 LB/FT3 DENSITY WITH K=0.29. FSK FACING.
D. LINER (UNCONDITIONED SPACES): RETURN DUCT ONLY. MINERAL-FIBER DUCT LINER IN ACCORDANCE WITH ASTM C1071, TYPE II, MIN. R-4.2. 0.75 LB/FT3 DENSITY WITH K=0.29. FSK FACING.
E. LINER (PLENUM NOISE CONTROL): SAME AS ABOVE.
F. EXTERIOR: MINERAL-FIBER BOARD IN ACCORDANCE WIT

GENERAL NOTES

A. MECHANICAL, ELECTRICAL, AND PLUMBING CONTRACTORS ARE TO COORDINATE ALL SYSTEMS IN WALLS.

B. COORDINATE ROOF PENETRATIONS WITH OWNER AND GENERAL CONTRACTOR.

C. CONTRACTOR IS TO FIX SUPPLY DAMPERS IN POSITION AFTER TEST AND BALANCE ON SYSTEM IS ACCOMPLISHED.

D. ROUTE ALL DUCTWORK TIGHT TO UNDERSIDE OF STRUCTURE AND SECURE TO THE STRUCTURE, NOT THE ROOF DECK.

KEYED NOTES

1. INSTALL PTAC-1 UNIT PER MANUFACTURER'S INSTALLATION INSTRUCTIONS. PROVIDE SLEEVE TO ALLOW PTAC UNIT INSTALLATION FLUSHED WITH THE WINDOW LOUVER. PROVIDE ARCHITECT APPROVED LOUVER. LOUVER SHALL NOT EXCEED 0.24" W.C. PRESSURE DROP (DESIGN CONDENSER AIR FLOW 1200 CFM). PTAC SHALL BE ORDERED WITHOUT EXTERNAL LOUVER. SLOPE SLEEVE TOWARDS OUTSIDE WALL.
2. INSTALL ALL COMPONENTS ACCORDING TO MANUFACTURER'S RECOMMENDATIONS. COORDINATE WITH ELECTRICAL FOR WALL SWITCH. FAN RUNS CONTINUOUSLY ON LOW, BUT WILL INCREASE TO HIGH WITH SWITCH. REFER TO THE EXHAUST FAN SCHEDULE ON SHEET M610 FOR CFM'S.
3. 7"ø EA FROM RH-1. ROUTE DUCT IN SOFFIT AND OUT THROUGH THE SIDEWALL AND TERMINATE PER THE MANUFACTURER'S INSTALLATION INSTRUCTIONS.
4. 4"ø EA FROM EF-1 ROUTE THROUGH SOFFIT AND TO THE OUTDOORS THROUGH THE WALL. TERMINATE PER THE MANUFACTURER'S INSTALLATION INSTRUCTIONS.
5. UNDERCUT DOOR BY APPROXIMATELY 1".
6. INSTALL WF-1 TO BE CONTROLLED BY WALL SWITCH. COORDINATE WITH ELECTRICAL FOR WALL SWITCH.
7. WF-1 SHALL BE INSTALLED IN A INTERIOR WALL 3" TO 5-1/2" THICK AND NOT THROUGH A FIRE RATED WALL.
8. ROUTE REFRIGERANT LINES PER MANUFACTURERS INSTRUCTIONS FROM AC-1, AC-2, & AC-3 TO MCU-1 LOCATED IN LOBBY. COORDINATE WITH ARCHITECT, ELECTRICAL, AND OWNER.
9. ROUTE REFRIGERANT LINES FROM MCU-1 ON FIRST FLOOR TO CU-1 LOCATED ON ROOF. COORDINATE WITH ARCHITECT, ELECTRICAL, AND STRUCTURAL.
10. INSTALL ALL COMPONENTS ACCORDING TO MANUFACTURER'S RECOMMENDATIONS. FAN RUNS CONTINUOUSLY. REFER TO THE EXHAUST FAN SCHEDULE ON SHEET M610 FOR CFM'S.
11. INSTALL ALL COMPONENTS ACCORDING TO MANUFACTURER'S RECOMMENDATIONS. COORDINATE WITH ELECTRICAL FOR OCCUPANCY SENSOR. REFER TO THE EXHAUST FAN SCHEDULE ON SHEET M610 FOR CFM'S.
12. INSTALL PER MANUFACTURES RECOMMENDATIONS AS SURFACE MOUNT. COORDINATE WITH ELECTRICAL.
13. 5"ø EA EF-2 & 7"ø EA EF-3 ROUTE TO THE OUTDOORS THROUGH THE WALL. TERMINATE PER THE MANUFACTURER'S INSTALLATION INSTRUCTIONS.
14. COORDINATE WITH PLUMBING FOR 3/4" CONDENSATE LINES. INSTALL LINE ABOVE P-TRAP IN CLOSEST SINK.
15. ROUTE REFRIGERANT LINES PER MANUFACTURERS INSTRUCTIONS UP TO CU-2 ON THE ROOF NOT USED FOR THE SECOND OR THIRD FLOOR FROM AC-4.
16. 4" Ø OUTSIDE AIR INTAKE, COORDINATE WITH OTHER DISCIPLINES FOR INSTALLATION PER MANUFACTURERS INSTRUCTIONS.

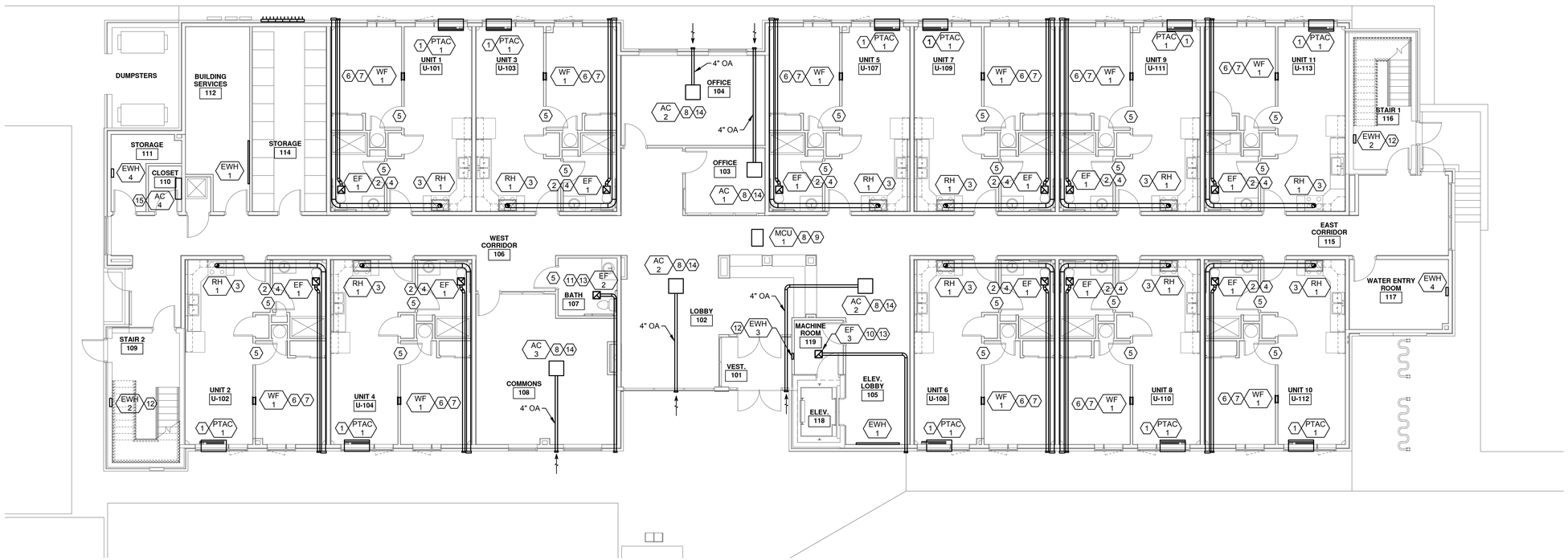

NORTH

MECHANICAL HVAC - FIRST FLOOR PLAN

SCALE: 1/8" = 1'-0"

HGF ARCHITECTS INC.

COLORADO REGISTERED PROFESSIONAL ENGINEER
32686
04/27/2020

PLANT
ENGINEERING CONSULTANTS
320 W FILLMORE SUITE 100 COLORADO SPRINGS CO 80907
719 473 7077
www.plantecl.com

PROJECT NUMBER: 19161
PHASE: PERMIT SET
PHASE ISSUE DATE: 04/27/2020
DESIGNED BY: RL/AO/MF
SCALE:

MECHANICAL HVAC - FIRST FLOOR PLAN

SHEET ISSUE DATE: 04/27/2020

M111

THE RIGHT PLACE
CARDINAL CAPITAL MGMT.
A SUPPORTIVE HOUSING FACILITY

4/27/2020 4:38:06 PM james hollock
J:\projects\19161\19161 the right place\planning files\mechanical\19161_m111.dwg

GENERAL NOTES

A. MECHANICAL, ELECTRICAL, AND PLUMBING CONTRACTORS ARE TO COORDINATE ALL SYSTEMS IN WALLS.

B. COORDINATE ROOF PENETRATIONS WITH OWNER AND GENERAL CONTRACTOR.

C. CONTRACTOR IS TO FIX SUPPLY DAMPERS IN POSITION AFTER TEST AND BALANCE ON SYSTEM IS ACCOMPLISHED.

D. ROUTE ALL DUCTWORK TIGHT TO UNDERSIDE OF STRUCTURE AND SECURE TO THE STRUCTURE, NOT THE ROOF DECK.

KEYED NOTES

1. INSTALL PTAC-1 UNIT PER MANUFACTURER'S INSTALLATION INSTRUCTIONS. PROVIDE SLEEVE TO ALLOW PTAC UNIT INSTALLATION FLUSHED WITH THE WINDOW LOUVER. PROVIDE ARCHITECT APPROVED LOUVER. LOUVER SHALL NOT EXCEED 0.24" W.C. PRESSURE DROP (DESIGN CONDENSER AIR FLOW 1200 CFM). PTAC SHALL BE ORDERED WITHOUT EXTERNAL LOUVER. SLOPE SLEEVE TOWARDS OUTSIDE WALL.
2. INSTALL ALL COMPONENTS ACCORDING TO MANUFACTURER'S RECOMMENDATIONS. COORDINATE WITH ELECTRICAL FOR WALL SWITCH. FAN RUNS CONTINUOUSLY ON LOW, BUT WILL INCREASE TO HIGH WITH SWITCH. REFER TO THE EXHAUST FAN SCHEDULE ON SHEET M610 FOR CFM'S.
3. 7"ø EA FROM RH-1. ROUTE IN SOFFIT AND OUT THROUGH THE SIDEWALL AND TERMINATE PER THE MANUFACTURER'S INSTALLATION INSTRUCTIONS
4. 5"ø EA FROM EF-1 ROUTE IN SOFFIT AND TO THE OUTDOORS THROUGH THE WALL. TERMINATE PER THE MANUFACTURER'S INSTALLATION INSTRUCTIONS.
5. UNDERCUT DOOR BY APPROXIMATELY 1".
6. 4"ø DRYER EXHAUST. LOCATE HIGH THROUGH WALL.
7. INSTALL WF-1 TO BE CONTROLLED BY WALL SWITCH. COORDINATE WITH ELECTRICAL FOR WALL SWITCH.
8. WF-1 SHALL BE INSTALLED IN A INTERIOR WALL 3" TO 5-1/2" THICK AND NOT THROUGH A FIRE RATED WALL.
9. ROUTE REFRIGERANT LINES PER MANUFACTURERS INSTRUCTIONS UP TO CU-2 ON THE ROOF NOT USED FOR THE THIRD FLOOR FROM AC-4.
10. 8"x8" TRANSFER GRILL FROM LAUNDRY ROOM INTO CORRIDOR.
11. ROUTE REFRIGERANT LINES PER MANUFACTURERS INSTRUCTIONS UP TO CU-3 ON THE ROOF NOT USED FOR THE THIRD FLOOR FROM AC-5.
12. COORDINATE 3/4" CONDENSATE LINE FOR AC-5 INTO THE CLOSEST SINK. COORDINATE WITH PLUMING, INSTALL LINE BEFORE THE P-TRAP.

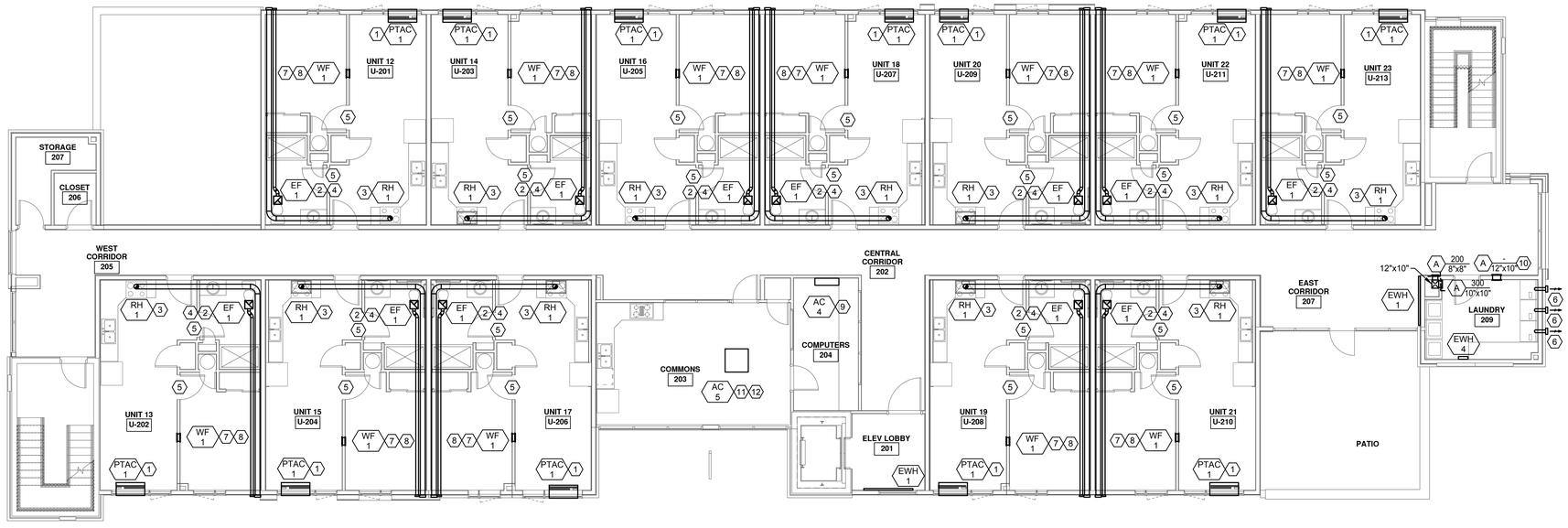

NORTH

MECHANICAL HVAC - SECOND FLOOR PLAN

SCALE: 1/8" = 1'-0"

HGF ARCHITECTS INC.

COLORADO REGISTERED PROFESSIONAL ENGINEER
04/27/2020

PLANT ENGINEERING CONSULTANTS
320 W FILLMORE SUITE 100 COLORADO SPRINGS CO 80907
719 473 7077 www.plantecl.com

PROJECT NUMBER:	19161
PHASE:	PERMIT SET
PHASE ISSUE DATE:	04/27/2020
DESIGNED BY:	RL/AO/MF
SCALE:	

MECHANICAL HVAC - SECOND FLOOR PLAN

SHEET ISSUE DATE: 04/27/2020

M112

THE RIGHT PLACE CARDINAL CAPITAL MGMT.

A SUPPORTIVE HOUSING FACILITY

4/27/2020 4:38:09 PM james hollock
p:\projects\2019\19161 the right place\drawing files\mechanical\19161_m112.dwg

GENERAL NOTES

A. MECHANICAL, ELECTRICAL, AND PLUMBING CONTRACTORS ARE TO COORDINATE ALL SYSTEMS IN WALLS.

B. COORDINATE ROOF PENETRATIONS WITH OWNER.

C. CONTRACTOR IS TO FIX SUPPLY DAMPERS IN POSITION AFTER TEST AND BALANCE ON SYSTEM IS ACCOMPLISHED.

D. ROUTE ALL DUCTWORK TIGHT TO UNDERSIDE OF STRUCTURE

HGF ARCHITECTS INC.

KEYED NOTES

1. INSTALL PTAC-1 UNIT PER MANUFACTURER'S INSTALLATION INSTRUCTIONS. PROVIDE SLEEVE TO ALLOW PTAC UNIT INSTALLATION FLUSHED WITH THE WINDOW LOUVER. PROVIDE ARCHITECT APRROVED LOUVER. LOUVER SHALL NOT EXCEED 0.24" W.C. PRESSURE DROP (DESIGN CONDENSER AIR FLOW 1200 CFM). PTAC SHALL BE ORDERED WITHOUT EXTERNAL LOUVER. SLOPE SLEEVE TOWARDS OUTSIDE WALL.
2. INSTALL ALL COMPONENTS ACCORDING TO MANUFACTURER'S RECOMMENDATIONS. COORDINATE WITH ELECTRICAL FOR WALL SWITCH. FAN RUNS CONTINUOUSLY ON LOW, BUT WILL INCREASE TO HIGH WITH SWITCH. REFER TO THE EXHAUST FAN SCHEDULE ON SHEET M610 FOR CFM'S.
3. 7"ø EA FROM RH-1. ROUTE IN SOFFIT AND OUT THROUGH THE WALL AND TERMINATE PER THE MANUFACTURER'S INSTALLATION INSTRUCTIONS
4. 5"ø EA FROM EF-1 ROUTE IN SOFFIT AND TO THE OUTDOORS THROUGH THE WALL. TERMINATE PER THE MANUFACTURER'S INSTALLATION INSTRUCTIONS.
5. UNDERCUT DOOR BY APPROXIMATELY 1".
6. RUN DRYER 4"ø VENT HIGH THROUGH THE WALL. TERMINATE WITH DRYER VENT CAP.
7. INSTALL WF-1 TO BE CONTROLLED BY WALL SWITCH. COORDINATE WITH ELECTRICAL.
8. WF-1 SHALL BE INSTALLED IN A INTERIOR WALL 3" TO 5-1/2" THICK AND NOT THROUGH A FIRE RATED WALL.
9. ROUTE REFRIGERANT LINES PER MANUFACTURERS INSTRUCTIONS UP TO CU-2 ON THE ROOF NOT USED FOR THE SECOND FLOOR FROM AC-4.
10. 8"x8" TRANSFER GRILL FROM LAUNDRY ROOM INTO CORRIDOR.
11. ROUTE REFRIGERANT LINES PER MANUFACTURERS INSTRUCTIONS UP TO CU-3 ON THE ROOF NOT USED FOR THE SECOND FLOOR FROM AC-5.
12. COORDINATE 3/4"CONDENSATE LINE FOR AC-5 WITH PLUMBING TO THE CLOSET SINK. LINE SHOULD BE INSTALLED BEFORE P-TRAP.

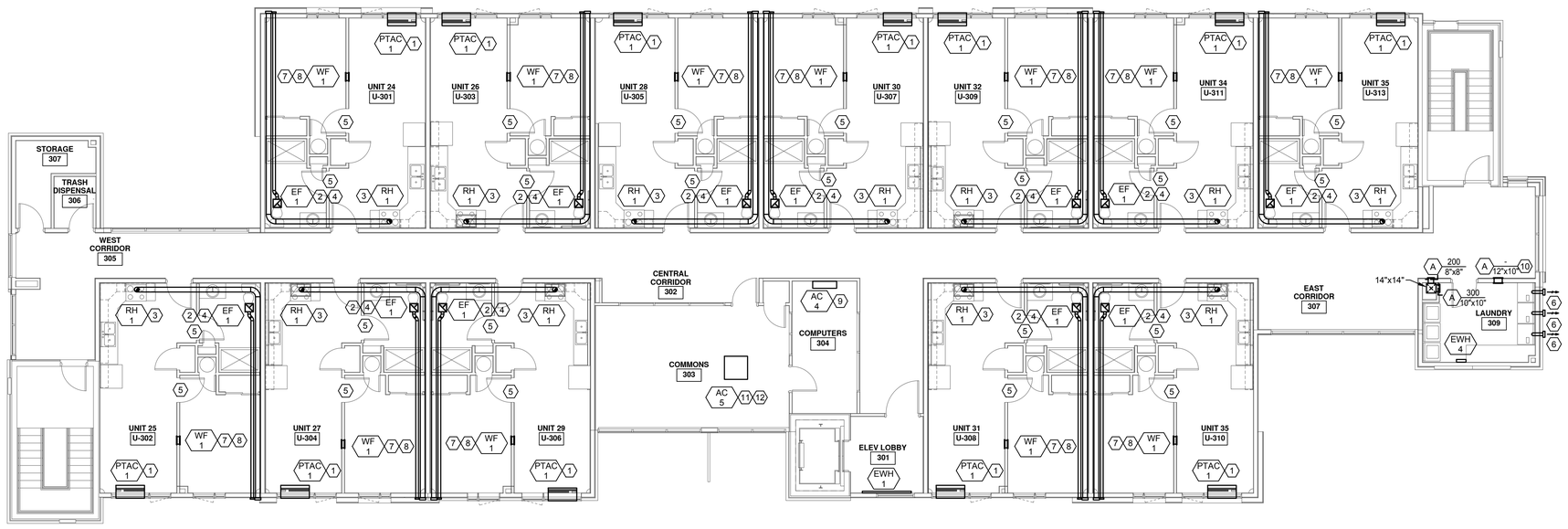

NORTH

MECHANICAL HVAC - THIRD FLOOR PLAN

SCALE: 1/8" = 1'-0"

COLORADO REGISTERED PROFESSIONAL ENGINEER
04/27/2020

PLANT ENGINEERING CONSULTANTS
320 W FILLMORE SUITE 100 COLORADO SPRINGS CO 80907
719 473 7077
www.plantecl.com

PROJECT NUMBER:	19161
PHASE:	PERMIT SET
PHASE ISSUE DATE:	04/27/2020
DESIGNED BY:	RL/AO/MF
SCALE:	

MECHANICAL HVAC - THIRD FLOOR PLAN

SHEET ISSUE DATE: 04/27/2020

M113

THE RIGHT PLACE CARDINAL CAPITAL MGMT.

A SUPPORTIVE HOUSING FACILITY

4/27/2020 4:38:12 PM james hollock
p:\projects\2019\19161 the right place\drawing files\mechanical\19161_m113.dwg

GENERAL NOTES

A. MECHANICAL, ELECTRICAL, AND PLUMBING CONTRACTORS ARE TO COORDINATE ALL SYSTEMS IN WALLS.

B. COORDINATE ROOF PENETRATIONS WITH OWNER.

C. INSTALL THE CONDENSING UNIT'S PER THE MANUFACTURER'S INSTALLATION INSTRUCTIONS. ENSURE ALL CLEARANCE ARE MAINTAINED PER THE INSTRUCTIONS. REFER TO THE SPECIFIC CLEARANCES REQUIRED FOR INSTALLING MULTIPLE CONDENSING UNITS IN CLOSE PROXIMITY.

KEYED NOTES

1. ROUTE REFRIGERANT LINES PER MANUFACTURERS INSTRUCTIONS FROM CU-2 DOWN TO AC-4 IN COMPUTER ROOMS ON THE SECOND FLOOR OR THIRD FLOOR. ONE CU-2 WILL SERVE THE SECOND FLOOR WHILE THE OTHER WILL SERVE THE THIRD FLOOR.
2. TRANSITION DUCT OPENING OF MAU-1 TO 24"x24" DUCT AND THEN TO 14x14" AND ROUTE DOWN THROUGH ROOF TO CHASE TO SUPPLY SECOND AND THIRD FLOOR LAUNDRY ROOMS AND CORRIDORS.
3. ROUTE REFRIGERANT LINES PER MANUFACTURERS INSTRUCTIONS FROM CU-3 DOWN TO AC-5 IN COMMONS ON THE SECOND OR THIRD FLOOR. ONE CU-3 WILL SERVE THE SECOND FLOOR WHILE THE OTHER WILL SERVE THE THIRD FLOOR.
4. ROUTE REFRIGERANT LINES PER MANUFACTURERS INSTRUCTIONS DOWN TO MCU-1 IN THE LOBBY ON THE FIRST FLOOR FROM CU-1.
5. ROUTE REFRIGERANT LINES PER MANUFACTURERS INSTRUCTIONS FROM CU-2 DOWN TO AC-4 IN COMMUNICATION ROOM ON THE FIRST FLOOR.

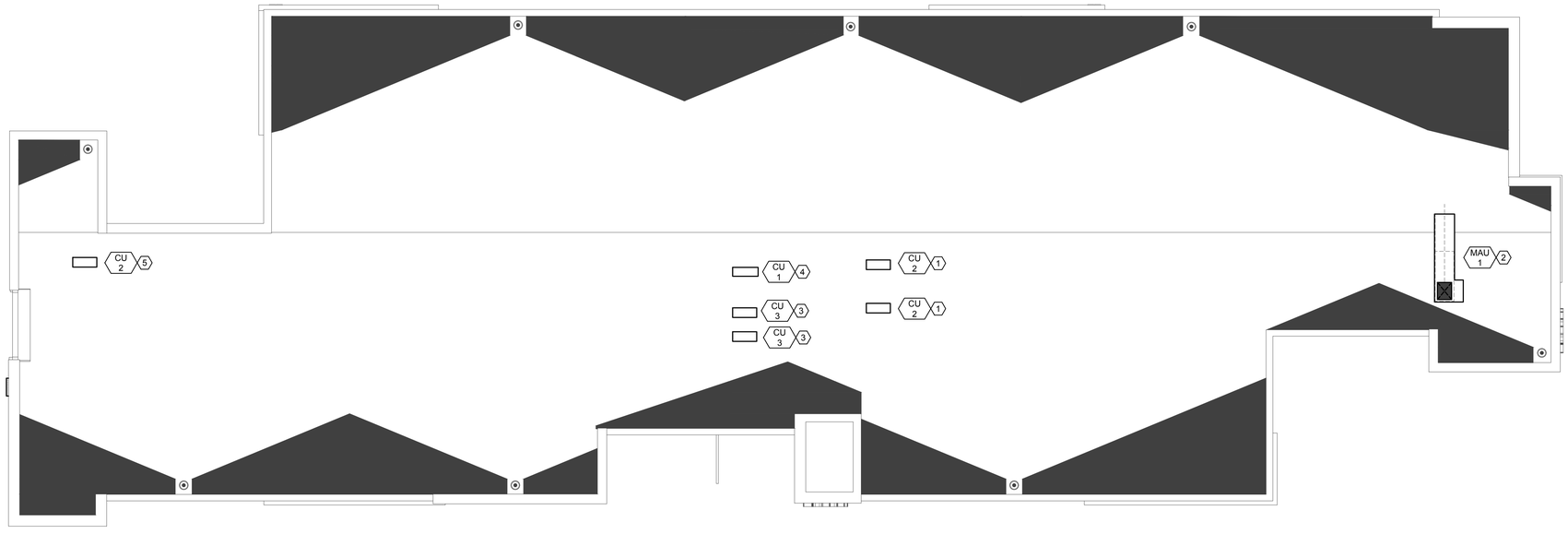

NORTH

MECHANICAL ROOF PLAN

SCALE: 1/8" = 1'-0"

HGF ARCHITECTS INC.

PLANT ENGINEERING CONSULTANTS
320 W FILLMORE SUITE 100 COLORADO SPRINGS CO 80907
719 473 7077
www.plantecl.com

COLORADO REGISTERED P.E.
32686
04/27/2020
PROFESSIONAL ENGINEER

PROJECT NUMBER: 19161
PHASE: PERMIT SET
PHASE ISSUE DATE: 04/27/2020
DESIGNED BY: RL/AO/MF
SCALE:

MECHANICAL ROOF PLAN

SHEET ISSUE DATE: 04/27/2020

M114

THE RIGHT PLACE
CARDINAL CAPITAL MGMT.
A SUPPORTIVE HOUSING FACILITY

4/27/2020 4:38:15 PM james hollock
p:\projects\19161 the right place\drawing files\mechanical\19161_m114.dwg

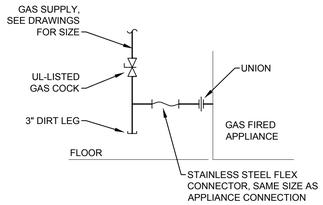

1 EQUIPMENT GAS CONNECTION

NOT TO SCALE

GENERAL NOTES

A. GAS WATER HEATER IN THE FIRST FLOOR WATER ENTRY ROOM SUPPLIES HOT WATER TO THE 6 CLOTHES WASHERS ON THE SECOND AND THIRD FLOORS, THE MOP SINK ON THE FIRST FLOOR, THE COMMON BATHROOM (LAVATORY AND WATER CLOSET) ON THE FIRST FLOOR, AND THE COMMON KITCHEN (SINK AND DISHWASHER) ON THE SECOND FLOOR.

B. THE GAS IS SUPPLIED TO TWO ITEMS IN THE BUILDING, THE WATER HEATER (WH-1) IN THE WATER ENTRY ROOM, AND THE MAKE-UP AIR UNIT (MAU-1) ON THE ROOF.
GAS LOAD FOR WH-1: 75 MBH.
GAS LOAD FOR MAU-1: 82.5 MBH
TOTAL BUILDING GAS LOAD: 75 + 82.5 = 157.5 MBH
TOTAL DEVELOPED LENGTH FROM METER TO MAU-1 ON ROOF IS 70 FEET.

C. GAS PIPE IS SIZED PER 2015 INTERNATIONAL FUEL GAS CODE, USING TABLE 402.4(1). USING NATURAL GAS IN SCHEDULE 40 METALLIC PIPE AT PRESSURE LESS THAN 2 PSI.

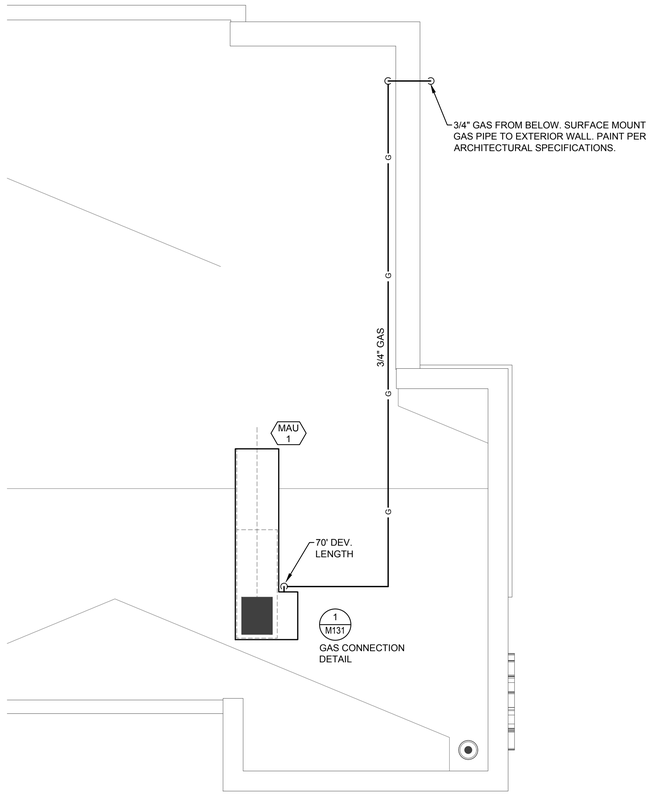

MECHANICAL GAS PLAN - ROOF PLAN

SCALE: 1/4" = 1'-0"

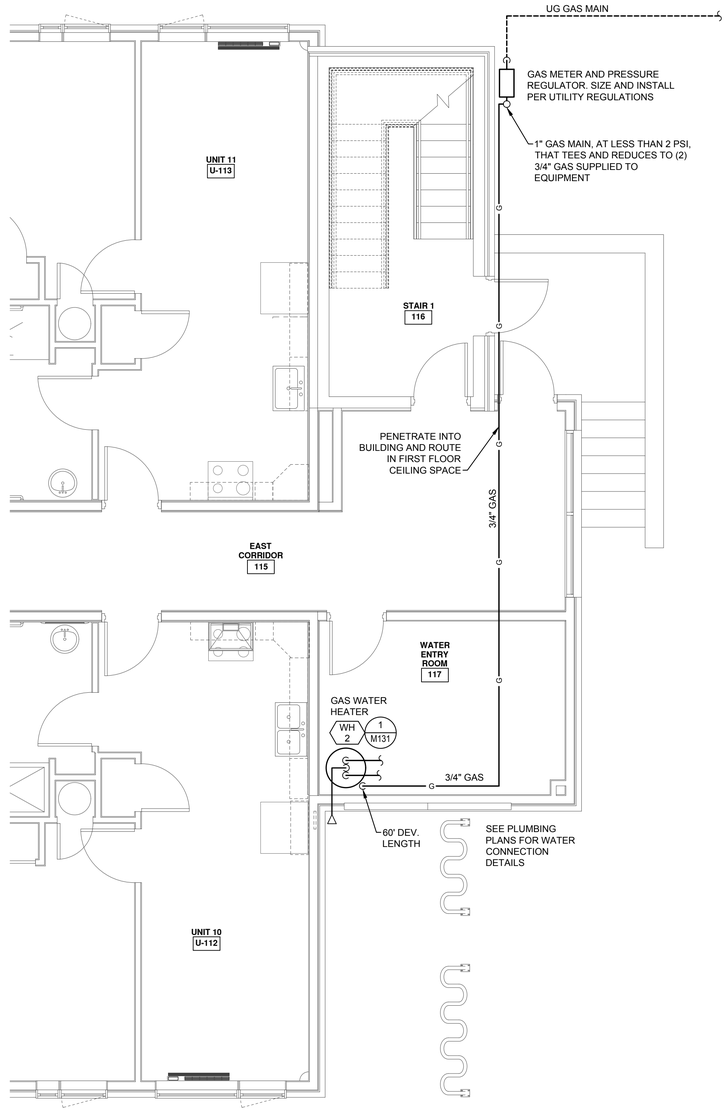

MECHANICAL GAS PLAN - FIRST FLOOR PLAN

SCALE: 1/4" = 1'-0"

HGF ARCHITECTS INC.

COLORADO REGISTERED PROFESSIONAL ENGINEER
04/27/2020

PLANT ENGINEERING CONSULTANTS
320 W FILLMORE SUITE 100 COLORADO SPRINGS CO 80907
719 473 7077
www.plantec1.com

PROJECT NUMBER:	19161
PHASE:	PERMIT SET
PHASE ISSUE DATE:	04/27/2020
DESIGNED BY:	RL/AO/MF
SCALE:	

MECHANICAL GAS PLAN

SHEET ISSUE DATE: 04/27/2020

M131

THE RIGHT PLACE CARDINAL CAPITAL MGMT.

A SUPPORTIVE HOUSING FACILITY

4/27/2020 4:38:18 PM james hollock
p:\projects\2019\19161 the right place\drawing files\mechanical\19161_m131.dwg

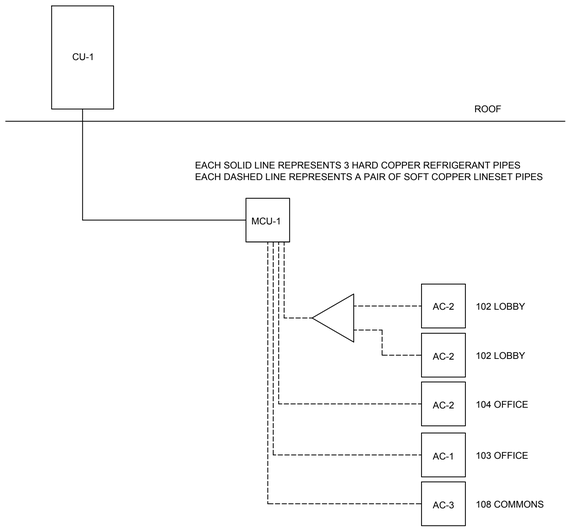

2 FIRST FLR SCHEMATIC SPLIT SYTEM

NOT TO SCALE

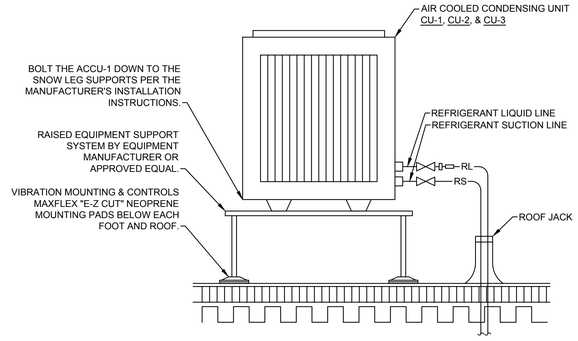

1 CONDENSING UNIT ON ROOF

NOT TO SCALE

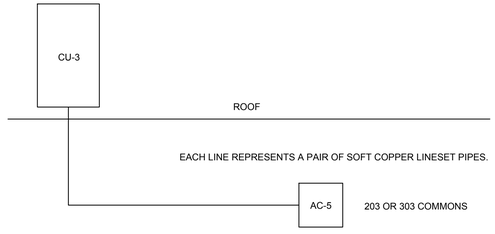

4 2ND & 3RD FLR COMMONS SCHEMATIC SPLIT SYSTEM

NOT TO SCALE

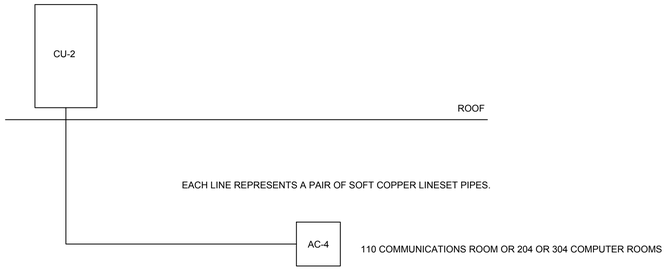

3 1ST AND 2ND AND 3RD FLR SCHEMTIC SPLIT SYSTEM

NOT TO SCALE

HGF ARCHITECTS INC.

COLORADO REGISTERED P.E.
32686
04/27/2020
PROFESSIONAL ENGINEER

PLANT ENGINEERING CONSULTANTS
320 W FILLMORE SUITE 100 COLORADO SPRINGS CO 80907
719 473 7077
www.plantecl.com

PROJECT NUMBER: 19161
PHASE: PERMIT SET
PHASE ISSUE DATE: 04/27/2020
DESIGNED BY: RL/AO/MF
SCALE:

MECHANICAL DETAILS

SHEET ISSUE DATE: 04/27/2020

M500

THE RIGHT PLACE
CARDINAL CAPITAL MGMT.
A SUPPORTIVE HOUSING FACILITY

4/27/2020 4:38:20 PM james hollock
P:\Projects\19161 the right place\drawing files\mechanical\19161_m500.dwg

MAKE-UP AIR UNIT SCHEDULE

MARK	MAU-1
GENERAL DATA	
ELEVATION (FT)	4,700
AREA SERVED	SEE PLAN
TYPE	HORIZ. OUTDOOR,BOTTOM DISCHARGE,
	100% OUTSIDE AIR, INDIRECT GAS
MANUFACTURER	GREENHECK
MODEL AND SIZE	IGX-108-H12-C
SUPPLY FAN DATA	
AIRFLOW SCFM (CAPACITY)	1,000
EXT. STATIC PRESS. (in WC)	0.50
DRIVE TYPE	BELT
FAN MOTOR (HP)	0.75
HEATING SECTION DATA	
ENT. AIR TEMP (deg F DB)	0.0
LEAV. AIR TEMP (deg F DB)	72.7
CAPACITY INPUT(MBH)	82.5
CAPACITY OUTPUT(MBH)	66.0
REQ. GAS PRESS. (in WC)	6.0
ELECTRICAL DATA	
VOLTS/PHASE	115 / 1
MCA / MOP	20.3 / 30
APPROX. UNIT WEIGHT (LBS)	
INCLUDING ACCESSORIES	855
NOTES:	(1)(2)(3)(4)(5)(6)(7)(8)

NOTES:
(1) UNIT TO BE MOUNTED ON STEEL SUPPORT FRAME ON ROOF
(2) FACTORY PAINTED, DOUBLE-WALL CONSTRUCTION WITH 2" INSULATION IN BETWEEN.
(3) FACTORY-MOUNTED DISCONNECT WITH SINGLE-POINT ELECTRICAL CONNECTION.
(4) FACTORY-SUPPLIED 120V RECEPTACLE, WIRED BY ELECTRICAL.
(5) FACTORY-INSTALLED STAND ALONE CONTROLS - INCLUDING COIL FREEZE PROTECTION, DIRTY FILTER SENSOR, HINGED ACCESSPANELS, MOTORIZED INLET DAMPER, WEATHERIZED CABINET, COOL INLET AIR SENSOR AND WEATHERHOOD WITH PREFILTERS MERV 8 AND FINAL MERV 13
(6) UNIT SHALL RUN CONTINUOUSLY DURING 24/7.
(7) PROVIDE FACTORY REMOTE CONTROL PANEL WITH ON/OFF AND DIRTY FILTER LIGHT.
(8) DUCT SENSOR TO MAINTAIN SYSTEM STATIC PRESSURE.
(9) DESIGN AIR FLOW INDICATED, AIR FLOW IN ( ) INDICATES MAX UNIT AIR FLOW

ELECTRIC WALL FAN

MARK	MANUFACTURER	MODEL	CFM	AMPS	VOLT/PHASE	NOTES
WF-1	BROAN	511	180	0.9	120/1	(1)(2)(3)(4)

NOTES:
(1) HEAVY DUTY FORCED AIR
(2) PROVIDE ROUGH-IN BOX.
(3) SET AT 65°F (ADJ.).

ELECTRIC WALL HEATER

MARK	MANUFACTURER	MODEL	KW	FLA	VOLT/PHASE	NOTES
EWH-1	RAYWALL	E2915-072SW	1.5	12.5	120/1	(1)(2)
EWH-2	RAYWALL	AFC8130T	3	14.4	208/1	(1)(2)(3)
EWH-3	RAYWALL	E3055T2DWB	0.75	12.5	120/1	(1)(2)
EWH-4	RAYWALL	AFC8120T	2	9.6	208/1	(1)(2)(3)

NOTES:
(1) PROVIDE INTEGRAL (TAMPER-PROOF) THERMOSTAT. SET AT 70°F (ADJ.).
(2) PROVIDE INTEGRAL DISCONNECT.
(3) PROVIDE WALL BOX 3420

OUTSIDE AIR SCHEDULE

USING ASHRAE 62.1-2007, TABLE 6-1

HVAC UNIT DESIGNATION	ROOM NUMBER	ROOM NAME	OCCUPANCY CLASSIFICATION	AREA (SF)	PEOPLE OUTDOOR AIR RATE (CFM PER PERSON)	AREA OUTDOOR AIR RATE (CFM/SF)	OCCUPANT DENSITY (#/1000 SF)	BREATHING ZONE OUTDOOR AIRFLOW Vbz (CFM) REQUIRED	ZONE AIR DISTRIB. Ez	ZONE OUTDOOR AIRFLOW REQUIRED Voz (CFM) =Vbz/Ez
HRV-1		UNIT	DWELLING UNIT	500	5	0.06	4	40.0	0.8	50
AC-2	105	LOBBY	RECEPTION AREA	802	5	0.06	30	168.4	0.8	211
CU-1	108	COMMONS	RECEPTION AREA	380	5	0.06	30	79.8	0.8	100
	103	OFFICE	OFFICE SPACE	100	5	0.06	5	8.5	10.8	1
	104	OFFICE	OFFICE SPACE	250	5	0.06	5	21.3	11.8	2
CU-3	208 &308	COMMONS	RECEPTION AREA	360	5	0.06	30	75.6	12.8	6
Subtotals				**4094**				OA CFM REQUIREMENT:		433
								OA CFM PROVIDED:		700

PTAC SCHEDULE

MARK	MANUFACTURER	MODEL	CFM H	O.A. CFM	COOLING CAP. (BTU/H)	HEATING CAP. (BTU/H)	AMPS (A) (COOL/HEAT)	POWER (W) (COOL/HEAT)	DIMENSIONS WxHxD (inch)	WEIGHT	EER	MCA	VOLT / PHASE	NOTES
PTAC-1	LG	LP073HDUC	420	50	11,900	10,300	2.7 / 2.6	1000/865	42x16x20	104	11.9	14.5	208/1	(1)(2)(3)(4)(5)

NOTES:
(1) PROVIDE WALL SLEEVE WITH PROPER TILT TO THE OUTDOORS.
(2) PROVIDE FRONT DESK CONTROL WIRING KIT. CONNECT TO BUILDING MANAGEMENT SYSTEM.
(3) PROVIDE UNITS WITHOUT CONDENSER GRILLE, INSTALL FLUSHED WITH WINDOW LOUVER. WINDOW LOUVER PER WINDOW MFR., LOUVER NOT TO EXCEED 0.24" S.P.
(4) ALL UNITS TO BE HARDWIRED
(5) WITH 15A CORD

MULTIZONE SPLIT SYSTEM SCHEDULE

	AC-1	AC-2	AC-3	AC-4	AC-5
INDOOR UNIT DETAIL					
FLOOR	1	1	1	2 & 3	2 & 3
AREA SERVED	103 OFFICES	LOBBY & 104 OFFICE	108 COMMONS	COMPUTER ROOMS	COMMMONS ROOM
ASSOCIATED EQPMT	CU-1, MCU-1	CU-1, MCU-1	CU-1, MCU-1	CU-2	CU-3
MOUNTING TYPE	NON-DUCTED	NON-DUCTED	NON-DUCTED	NON-DUCTED	NON-DUCTED
SYSTEM TYPE	HEAT RECOVERY	HEAT RECOVERY	HEAT RECOVERY	HEAT RECOVERY	HEAT RECOVERY
REFRIGERANT	R-410A	R-410A	R-410A	R-410A	R-410A
MANUFACTURER	SAMSUNG	SAMSUNG	SAMSUNG	SAMSUNG	SAMSUNG
MODEL	AM005NNNDCH/AA	AM009NNNDCH/AA	AM018NNNDCH/AA	AC018MNADCH/AA	AC018NN4DCH/AA
COOLING AIRFLOW (MAX, DRY COIL)	300	353	450	406	580
FAN DRIVE TYPE	DIRECT	DIRECT	DIRECT	DIRECT	DIRECT
TOTAL COOLING CAPACITY (MBH)	3.4	6.8	13.6	18.0	18.0
HEATING CAPACITY (MBH)	6.0	10.5	20.0	-	20.0
VOLTAGE/PHASE	208/1	208/1	208/1	208/1	208/1
MCA	0.24	0.24	0.24	-	-
APPROXIMATE DIMENSIONS (WxHxD, IN)	23x10x23	23x10x23	23x10x23	36x11x11	34x8x34
WEIGHT (LBS)	30	30	30	24	33
CONDENSATE DRAIN SIZE (IN)	1	1	1	-	1
FAN COIL UNIT NOTES:	(1)(2)(11)(20)	(1)(2)(11)(20)	(1)(2)(11)(20)	(1)(2)(11)(20)	(1)(2)(11)(20)

CONDENSING UNIT

MARK	CU-1	CU-2	CU-3
MANUFACTURER	SAMSUNG	SAMSUNG	SAMSUNG
MODEL	AM053NXMDCR/AA	AC018MXSCCC/AA	AC018JXADCH/AA
ASSOCIATED INDOOR EQPMT	AC-1, AC-2, AC-3, MCU-1	AC-4	AC-5
OUTDOOR UNIT V/PH/ MCA / MOCP	208 / 1 / 34 / 50.0	208 / 1 / 13 / 15	208 / 1 / 8.1 / 15
APPROX. OVERALL DIMENSIONS (WxHxD, IN)	37x48x13	37x48x14	35x26x12
WEIGHT (LBS)	220.5	95	99
CONDENSTING UNIT NOTES:	(3) (4)(5)(13)	(3)(4)(5)(13)	(3) (4)(5)(13)

BRANCH CIRCUIT CONTROLLER

MARK	MCU-1
MANUFACTURER	SAMSUNG
MODEL	MCU-R4NEK0N
ASSOCIATED EQPMT	CU-1, AC-1, AC-2, AC-3
NUMBER OF PORTS	4
VOLTAGE/PHASE	208-230/1
MCA	2
DIMENSIONS (WxHxD)	29x8x19

GENERAL NOTES (ALL UNITS):
A. SITE ELEVATION = 4700' ABOVE SEA LEVEL.
B. ALL UNITS THIS SCHEDULE ARE INTERCONNECTED VIA REFRIGERANT PIPING AND CONTROL WIRING.
C. ALL REFRIGERANT PIPING SHALL BE INSULATED WITH MINIMUM 1/2" INSULATION. SELF-ADHESIVE SPLIT INSULATION SHALL NOT BE USED. ZIP TIES SHALL NOT BE USED TO SECURE INSULATION.
D. ALL REFRIGERANT PIPING OUTSIDE THE BUILDING SHALL BE PROTECTED WITH ALUMINUM COVERS
E. ALL CONDENSATE PIPING SHALL BE INSULATED W/ 1" JACKETED FIBERGLASS INSULATION.

NOTES:
(1) GRAVITY-DRAIN UNIT'S CONDENSATE
(2) WASHABLE FILTER.
(3) PROVIDE MANUFACTURER'S SNOW/HAIL GUARD KIT
(4) PROVIDE MANUFACTURER'S LOW AMBIENT KIT

MOUNTING NOTES:
(11) SUSPENED UNIT FROM STRUCTURE USING ALL-THREAD ROD AND FOUR (4) NEOPRENE HANGERS, MIN. 1/2" DEFLECTION.
(13) MOUNT UNIT MANUFACTURER PROVIDED SNOW LEGS 12" ABOVE SNOW LINE OR ON AN APPROVED ALTERNATE

CONTROL NOTES:
(20) PROVIDE WIRELESS WALL MOUNTED THERMOSTAT

AIR DISTRIBUTION SCHEDULE

MARK	MANUF.	MODEL	TYPE	FACE SIZE	NECK SIZE	COLOR	FRAME	NOTES
A	PRICE	510	LOUVERED SUPPLY	SEE PLANS	SEE PLANS	BY ARCH.	SIDE WALL	(1)

NOTES:
(1) INCLUDE DAMPER.

EXHAUST FAN SCHEDULE

TAG	MANUFACTURER	MODEL	CFM MIN/MAX	ESP "WC	TYPE	DRIVE	SONES	WATTS	VOLTS/ø	NOTES
EF-1	PANASONIC	FV-05-11VKS2	30/80	0.25	CEILING	DIRECT	0.5	25	120/1	1,2,3,4,5
EF-2	PANASONIC	FV-05-11VKS2	80	0.25	CEILING	DIRECT	0.5	25	120/1	1,2,3,6
EF-3	PANASONIC	FV-20VQ3	190	0.25	CEILING	DIRECT	0.5	25	120/1	1,2,3,7

NOTES
1. INCLUDES WHITE PLASTIC GRILLE
2. MEETS ENERGY STAR RATINGS AND ASHRAE STD 62.2
3. BACKDRAFT DAMPER
4. INCLUDE GRILLE MOUNTED OCCUPANCY SENSOR TO CONTROL FAN
5. SET FAN TO OPERATE CONTINUOUSLY AT 30 CFM UNOCCUPIED AND 80 WHEN OCCUPIED
6. SWITCH WITH LIGHT SWITCH
7. RUN CONSTINUOUSLY AT 190 CFM

RANGE HOOD SCHEDULE

TAG	MANUFACTURER	MODEL	TYPE	CFM	SONES	VOLTS/ø	MCA	NOTES
RH-1	BROAN	42300	7"ø VENTED	190	60	120/1	2.5	1,2,3,4,5,6

NOTES
1. INCLUDES BACKDRAFT DAMPER
2. 30" WIDTH
3. 75 WATT LIGHT
4. 2-SPEED
5. OWNER TO CHOOSE COLOR
6. INSTALL SWITCH IN ADA APARTMENT ON LOWER CABINET

HGF ARCHITECTS INC.

COLORADO REGISTERED 32686 PROFESSIONAL ENGINEER
04/27/2020

PLANT ENGINEERING CONSULTANTS
320 W FILLMORE SUITE 100 COLORADO SPRINGS CO 80907
719 473 7077
www.plantecl.com

PROJECT NUMBER: 19161
PHASE: PERMIT SET
PHASE ISSUE DATE: 04/27/2020
DESIGNED BY: RL/AO/MF
SCALE:

MECHANICAL SCHEDULES

SHEET ISSUE DATE: 04/27/2020

M610

A SUPPORTIVE HOUSING FACILITY

THE RIGHT PLACE
CARDINAL CAPITAL MGMT.

4/27/2020 4:38:23 PM james hollock
d:\projects\19161 the right place\drawing files\mechanical\19161_m610.dwg

ABBREVIATIONS

AAV/AV	AIR VENT
AC	AIR COMPRESSOR/ AIR CONDITIONER
ACU	AIR CONDENSING UNIT
AD	AIR DRIER
AFF	ABOVE FINISHED FLOOR
AFG	ABOVE FINISHED GRADE
AFS	AIRFLOW STATION
AHU	AIR HANDLING UNIT
AP	AIR PURIFIER
AT	AIR TANK
BCU	BATTERY COOLING UNIT
BFP	BACK FLOW PREVENTER
BOD	BOTTOM OF DUCT
CA	COMPRESSED AIR
CHWP	CHILLED WATER PUMP
CHWR	CHILLED WATER RETURN
CHWS	CHILLED WATER SUPPLY
CIRC	CIRCULATION
CRAC	COMPUTER ROOM AIR CONDITIONER
CT	COOLING TOWER
CU	CONDENSING UNIT
CUH	CABINET UNIT HEATER
D	DRAIN
DCW	DOMESTIC COLD WATER
DD	DUAL DUCT TERMINAL BOX
DDC	DIRECT DIGITAL CONTROLLER
DHW	DOMESTIC HOT WATER
DTW	DOMESTIC TEMPERED WATER
(E), EX	EXISTING
EA	EXHAUST AIR
EDH	ELECTRIC DUCT HEATER
EF/EX	EXHAUST FAN
EHC	ELECTRICAL HEATING CABINET
FB	FILTER BOX
FC	FAN COIL
G	NATURAL GAS
HWC	DOMESTIC HOT WATER RECIRCULATION
HWP	HOT WATER PUMP
HWR	HOT WATER RETURN
HWS	HOT WATER SUPPLY
MAU	MAKEUP AIR UNIT
MM	MINIMATE A/C UNIT
MR	MECHANICAL ROOM
MVD	MANUAL VOLUME DAMPER
MZU	MULTI ZONE UNIT
NA	NOT AVAILABLE
OA	OUTSIDE AIR
P	PUMP
PENT	PENTHOUSE
PWU	PACKAGED WALL UNIT
RA	RETURN AIR
RD	REFRIGERANT DISCHARGE
RF	RETURN FAN
RP	RADIANT PANEL
RR	REST ROOM
RS	REFRIGERANT SUCTION
RTU	ROOF TOP UNIT
SA	SUPPLY AIR
TA	TRANSFER AIR
TF	TRANSFER FAN
TOD	TOP OF DUCT
UH	UNIT HEATER
UNO	UNLESS NOTED OTHERWISE
VAV	VARIABLE AIR VOLUME

PLUMBING SHEET INDEX

SHEET	TITLE
P001	PLUMBING NOTES AND LEGEND
P002	PLUMBING SPECIFICATIONS
P003	FIRE SUPPRESSION SPECIFICATIONS
P004	FIRE SUPPRESSION SPECIFICATIONS
PD111	PLUMBING DEMOLITION PLAN
PD112	PLUMBING DEMOLITION PLAN
PD113	PLUMBING DEMOLITION PLAN
P111	PLUMBING WATER PLAN
P112	PLUMBING WATER PLAN
P113	PLUMBING WATER PLAN
P121	PLUMBING SANITARY PLAN
P122	PLUMBING SANITARY PLAN
P123	PLUMBING SANITARY PLAN
P500	PLUMBING DETAILS
P610	PLUMBING SCHEDULES

PLUMBING LEGEND

SYMBOL	ABBR.	DESCRIPTION
	SAN	SOIL, WASTE, OR SANITARY ABOVE GRADE OR FLOOR
	SAN	SOIL, WASTE, OR SANITARY BELOW GRADE OR FLOOR
	SD	STORM DRAIN
	GW	GREASE WASTE
	V	VENT
	CW	COLD WATER
	HW	HOT WATER (110°F)
	HWC	HOT WATER CIRCULATING
TW	TW	TEMPERED WATER (110°F)
G	G	NATURAL GAS
		EXISTING PIPING
		HATCH DENOTES TO BE REMOVED
		ELBOW DOWN
		ELBOW UP
		TEE DOWN
		TEE UP
		VALVE IN RISER
		UNION
		STRAINER WITH BLOWOFF VALVE
		REDUCER
		BALL VALVE
		BUTTERFLY VALVE
		GATE VALVE
		GLOBE VALVE
		ANGLE VALVE
		PLUG VALVE
		CHECK VALVE
	CBV	CALIBRATED BALANCING VALVE
	PRV	PRESSURE REGULATING VALVE
	PSV	PRESSURE RELIEF VALVE
	DCBFP	BACKFLOW PREVENTER, DOUBLE CHECK
	RPBFP	BACKFLOW PREVENTER, REDUCED PRESSURE
	WHA	WATER HAMMER ARRESTER
	FD	FLOOR DRAIN
	FS	FLOOR SINK
	FCO	FLOOR CLEANOUT
	FDC	FIRE DEPARTMENT CONNECTION
	WCO	WALL CLEANOUT
	HB	HOSE BIBB
		FLOOR OR WALL PENETRATION (ISOMETRIC)
		CONNECT NEW TO EXISTING
XX #		FIXTURE OR EQUIPMENT CALLOUT (SEE SCHEDULE)
	(E)	EXISTING
	(N)	NEW
	(R)	RELOCATED

PLUMBING GENERAL NOTES (2015)

A. ALL PLUMBING SHALL BE INSTALLED IN ACCORDANCE WITH 2015 INTERNATIONAL PLUMBING CODE (INCLUDE FOR LOCAL) AND PPRBD AMENDMENTS.

B. NOT ALL EXISTING PIPING, AND ACCESSORIES ARE NECESSARILY SHOWN ON THIS DRAWING, BUT WHAT IS DEEMED NECESSARY TO SHOW INTENT OF WORK INVOLVED IN THIS PROJECT. REFER TO ALL PLANS, SECTIONS, DETAILS, SCHEDULES AND SPECIFICATIONS FOR COMPLETE SYSTEM REQUIREMENTS.

C. CONTRACTOR SHALL FIELD VERIFY EXISTING CONDITIONS PRIOR TO ORDERING OR FABRICATION OF MATERIAL OR PERFORMING ANY NEW WORK. DEVIATIONS FROM CONDITIONS SHOWN IN THESE PLANS SHALL BE REPORTED TO THE PROJECT MANAGER IMMEDIATELY AND NO WORK SHALL BE PERFORMED IN THIS AREA UNTIL A RESOLUTION HAS BEEN ESTABLISHED. SITE CONDITIONS DIFFERING FROM THOSE SHOWN ON THESE PLANS WILL NOT BE GENERALLY CONSIDERED A BASIS FOR CONTRACT MODIFICATION AS THE CONTRACTOR SHALL TAKE INTO ACCOUNT WORST CASE SITE CONDITIONS WHEREVER POSSIBLE.

D. COORDINATE ALL PENETRATIONS OF FLOOR, ROOF, WALLS, ETC. WITH GENERAL CONTRACTOR. ALL PENETRATIONS THROUGH FIRE/SMOKE RATED CONSTRUCTION SHALL BE SEALED IN ACCORDANCE WITH SECTION 717 OF THE 2015 INTERNATIONAL BUILDING CODE.

E. MAXIMUM HOT WATER OUTLET TEMPERATURE TO PUBLIC LAVATORIES SHALL BE 110°F IN ACCORDANCE WITH THE 2015 INTERNATIONAL ENERGY CODE.

F. MOUNT HANDICAPPED FIXTURES AT HEIGHTS ABOVE THE FINISHED FLOOR AS DIRECTED BY AMERICANS WITH DISABILITIES ACT AND STATE BUILDING CODES, INCLUDE OFFSET TAILPIECE AND TRUBRO LAV-GUARD INSULATION KIT.

G. INSULATE ALL HOT AND COLD WATER TO FIXTURES IN ACCORDANCE WITH 2015 INTERNATIONAL ENERGY CODE.

H. FURNISH AND INSTALL INDIVIDUAL STOPS (SHUT-OFF VALVES) FOR EACH PLUMBING FIXTURE.

I. PROVIDE ACCESS DOORS OR OTHER MEANS OF APPROVED ACCESS TO ALL ISOLATION VALVES, TRAP PRIMERS, AND WATER HAMMER ARRESTORS.

J. HOT AND COLD WATER PIPING ABOVE GRADE SHALL BE TYPE L HARD DRAWN COPPER TUBING CONFORMING TO ASTM B-88 WITH SWEAT JOINTS AND CAST OR WROUGHT FITTINGS. JOINTS SHALL BE MADE WITH LEAD FREE SOLDER. COLD WATER BELOW GRADE SHALL BE TYPE K COPPER TUBING. JOINTS SHALL NOT BE PERMITTED UNDER FLOOR SLAB. WATER PIPING PENETRATIONS SHALL BE PROTECTED WITH PLASTIC SLEEVES.

K. SANITARY PIPING NOT LOCATED IN PLENUMS OR PENETRATING FIRE RATED STRUCTURES SHALL BE SCHEDULE 40 DWV PVC WITH SOLVENT JOINTS. DWV PIPING IN PLENUMS SHALL BE NO-HUB CAST IRON.

L. FIELD VERIFY ACTUAL LOCATIONS OF EXISTING PIPING FOR NEW TIE-INS.

M. FURNISH AND INSTALL ALL REQUIRED COMPONENTS INCLUDING TRAPS, TAIL-PIECES, CARRIERS AND SUPPORTS. PROVIDE ALL FLOOR DRAINS/SINKS WITH TRAP PRIMER CONNECTED TO COLD WATER SUPPLY.

N. PLUMBING CONTRACTOR SHALL OBTAIN ALL NECESSARY PERMITS AND PAY ALL FEES RELATED TO PROJECT.

O. COORDINATE FINAL LOCATION OF PIPING WITH ALL OTHER TRADES BEFORE FABRICATION OR INSTALLATION.

P. INSULATE DOMESTIC WATER LINES IN ACCORDANCE WITH 2015 IECC.

Q. ALL SANITARY LINES SHALL BE VENTED IN ACCORDANCE WITH 2015 INTERNATIONAL PLUMBING CODE.

R. IN ACCORDANCE WITH 2015 INTERNATIONAL PLUMBING CODE SECTION 603.1 BUILDING SUPPLY PIPING LESS THAN 3/4" NOT ALLOWED. MINIMUM SIZES OF WATER SUPPLY PIPES TO FIXTURES SHALL BE PER 2015 IPC TABLE 604.5.

S. ALL HOSE BIBBS, WALL HYDRANTS AND JANITORIAL SERVICE SINKS SHALL BE EQUIPPED WITH APPROVED, PROPERLY INSTALLED ATMOSPHERIC TYPE VACUUM BREAKER.

T. DISHWASHER (DW) PROVIDED BY OWNER, INSTALLED BY CONTRACTOR. PROVIDE AIR GAP FITTING AT NEW DISHWASHER CONNECTION.

U. ALL VENTS THRU ROOF SHALL BE MINIMUM OF THREE FEET VERTICALLY AND TEN FEET HORIZONTALLY FROM AIR CONDITIONING EQUIPMENT FRESH AIR INTAKES, WINDOW, DOOR OR OTHER OPENINGS.

V. SEPARATE 8-1/2"X11" SPECIFICATIONS FORM A PART OF THESE DOCUMENTS.

W. TRENCHES INSTALLED PARALLEL TO FOOTINGS SHALL NOT EXTEND BELOW THE 45° BEARING PLANE OF THE FOOTING WALL.

X. SEE ARCHITECTURAL DRAWINGS FOR EXACT PLUMBING FIXTURE LOCATIONS AND QUANTITIES.

Y. CLEANOUTS SHALL BE INSTALLED PER 2015 IPC.

Z. CONTRACTOR SHALL KEEP HIS WORK, AND ADJACENT AREAS AFFECTED, FREE AND CLEAR FROM ALL DEBRIS CAUSED BY THE WORK OF THIS SECTION. DURING AND UPON COMPLETION OF WORK HEREIN SPECIFIED, REMOVE FROM BUILDING AND SITE ALL DEBRIS, UNUSED MATERIALS, AND EQUIPMENT CAUSED BY WORK OF THIS SECTION AND LEAVE WORK IN A CLEAN, ACCEPTABLE CONDITION.

AA. PROVIDE AND INSTALL WATER HAMMER ARRESTORS OF REQUIRED SIZE AND LOCATION, MANUFACTURER AND MODEL NUMBERS SHALL BE PER PLANS AND SCHEDULES.

AB. ALL FLAT VENTS SHALL HAVE CLEANOUTS PER 2015 IPC.

AC. ALL FLOOR SINKS, FLOOR DRAINS & FUNNEL DRAINS RECEIVING THE DISCHARGE OF INDIRECT WASTE PIPES SHALL BE LOCATED WHERE THEY ARE READILY ACCESSIBLE.

AD. COORDINATE WITH ELECTRICAL SECTION PRIOR TO ORDERING EQUIPMENT FOR AVAILABLE VOLTAGES AT EQUIPMENT LOCATIONS.

AE. AN APPROVED SEISMIC SEPARATION ASSEMBLIES SHALL BE INSTALLED WHERE HYDRONIC HVAC, PLUMBING, IRRIGATION, OR FIRE PROTECTION SPRINKLER PIPING, REGARDLESS OF SIZE, PENETRATES OR CROSSES BUILDING SEISMIC SEPARATION (EXPANSION) JOINTS AT GROUND LEVEL AND ABOVE. SEISMIC SEPARATION ASSEMBLIES SHALL CONSIST OF FLEXIBLE FITTINGS OR FLEXIBLE PIPING SO AS TO ALLOW MOVEMENT SUFFICIENT TO ACCOMMODATE CLOSING OF THE SEPARATION, OPENING OF THE SEPARATION TO TWICE ITS NORMAL SIZE, AND MOVEMENT RELATIVE TO THE SEPARATION IN ANY DIRECTION IN AN AMOUNT EQUAL TO THE SEPARATION DISTANCE. A SEISMIC SEPARATION SHALL BE SELECTED BY A CONTRACTOR ACCORDING TO THE LATEST EDITIONS OF IBC, IPC, IMC, IFC, NFPA-13, AND RULES, CODES, ORDERS, REGULATIONS, ORDINANCES, AND LAWS IMPOSED BY JURISDICTIONAL AUTHORITIES.

HGF ARCHITECTS INC.

COLORADO REGISTERED
JESSE D. LAMAY
32606
04/27/2020
PROFESSIONAL ENGINEER

PLANT ENGINEERING CONSULTANTS
320 W FILLMORE SUITE 100 COLORADO SPRINGS CO 80907
719 473 7077
www.plantecl.com

PROJECT NUMBER: 19161
PHASE: PERMIT SET
PHASE ISSUE DATE: 04/27/2020
DESIGNED BY: RL/AO/MF
SCALE:

PLUMBING NOTES AND LEGEND

SHEET ISSUE DATE: 04/27/2020

P001

THE RIGHT PLACE
CARDINAL CAPITAL MGMT.
A SUPPORTIVE HOUSING FACILITY

4/27/2020 4:38:26 PM james hollock
S:\Projects\2019\19161 the right place\Drawing Files\plumbing\19161_p001.dwg

DIVISION 22 - PLUMBING

SECTION 22 00 10 - BASIC REQUIREMENTS

1.01 GENERAL
A. ALL PROVISIONS OF THE CONTRACT DOCUMENTS APPLY TO THE WORK OF THIS DIVISION.
B. ALL DIVISION 22 SECTIONS ARE SUBJECT TO THE PROVISIONS OF THIS SECTION.

1.02 SUMMARY OF WORK
A. WORK INCLUDED: PROVIDE ALL LABOR, MATERIALS, EQUIPMENT, AND INCIDENTAL ITEMS NECESSARY FOR COMPLETELY FINISHED AND OPERATIONAL MECHANICAL SYSTEMS. EXAMINE DOCUMENTS OF OTHER TRADES FOR ANY ADDITIONAL WORK WHICH MAY BE REQUIRED OF THE PLUMBING CONTRACTOR.

1.03 DEFINITIONS
A. EXPOSED: EXPOSED IN MECHANICAL ROOMS OR ROOMS WITH FINISHED WALLS OR CEILINGS.
B. CONCEALED: LOCATED IN PIPE CHASES, FURRED SPACES, ATTICS, CRAWL SPACES, ABOVE SUSPENDED CEILINGS, OR ALL OTHER LOCATIONS NOT EXPOSED TO VIEW.
C. PROVIDE: FURNISHED AND INSTALL.

1.04 DIVISION OF RESPONSIBILITY
SPECIFICATION FORMATTING WHICH INDICATES A DIVISION IN THE PLUMBING WORK IS FOR CONVENIENCE ONLY. IT IS NOT INTENDED TO DELINEATE LINES OF RESPONSIBILITY BETWEEN SUBCONTRACTORS AND/OR SUPPLIERS. SUCH DELINEATION RESTS ENTIRELY WITH THE CONTRACTOR.

1.05 PLANS AND SPECIFICATIONS
PLANS ARE DIAGRAMMATIC. THEY INDICATE GENERAL INTENT, DESIGN AND ARRANGEMENT OF SYSTEMS. PROVIDE ALL MINOR INCIDENTALS SUCH AS FITTINGS, ETC., AS MAY BE REQUIRED EVEN THOUGH NOT SHOWN. PROVIDE ISOLATION VALVES AND UNIONS AS CALLED FOR IN THESE SPECIFICATIONS WHETHER OR NOT SHOWN ON DRAWINGS. DO NOT SCALE THE PLANS; TAKE DIMENSIONS FROM ACTUAL FIELD CONDITIONS.

1.06 CODES AND REGULATIONS
A. CONFORM TO CODES AND REGULATIONS APPLICABLE AT THE PROJECT SITE.
B. CALL FOR INSPECTIONS FROM LOCAL AUTHORITIES AS REQUIRED IF DISCREPANCIES OCCUR BETWEEN CONTRACT DOCUMENTS AND LOCAL REGULATIONS, THE MORE STRINGENT REQUIREMENT APPLIES.

1.07 FEES AND PERMITS
A. OBTAIN REQUIRED PERMITS.
B. PAY PERMIT FEES, CONSTRUCTION FEES, TAP FEES, INSPECTION FEES.
C. DEVELOPMENT FEES ARE PAID BY OWNER.

1.08 COORDINATION
A. COORDINATE WITH OTHER TRADES TO ASSURE ORDERLY PROGRESS OF THE WORK AND TO ASSURE PROPER FIT IN CONFINED SPACES.
B. REPORT TO THE ARCHITECT ANY CONSTRUCTION DEFECTS WHICH AFFECT THE PLUMBING WORK; PROCEED WITH PLUMBING WORK ONLY AFTER DEFECTS HAVE BEEN CORRECTED.

1.09 QUALITY ASSURANCE
A. PERFORM WORK IN ACCORDANCE WITH GOOD TRADE PRACTICE AND IN A NEAT MANNER. COMPLY WITH ARCHITECT'S DIRECTION CONCERNING FINISHED APPEARANCE.
B. ADHERE TO MANUFACTURER'S RECOMMENDATIONS.

1.10 PROTECTION
A. OF PEOPLE: ARRANGE BARRIERS, SIGNS, ETC. AS REQUIRED TO MINIMIZE THE HAZARD TO PEOPLE. COMPLY WITH APPLICABLE SAFETY AND HEALTH REGULATIONS.
B. OF WORK: TAKE ALL MEASURES NECESSARY TO PROTECT THE WORK BOTH BEFORE AND AFTER INSTALLATION, TO ASSURE THAT IT WILL BE IN CLEAN, UNDAMAGED, UNBLEMISHED CONDITION WHEN TURNED OVER TO THE OWNER. REPAIR/REPLACE WORK DAMAGED DURING CONSTRUCTION.

1.11 SUBMITTALS
A. SUBMIT PRODUCT DATA FOR THE FOLLOWING ITEMS:
1. ALL PLUMBING FIXTURES, ACCESSORIES AND PIPE INSULATION.
B. SUBMIT PDF THROUGH GENERAL CONTRACTOR TO ENGINEER.

1.12 RECORD DOCUMENTS
A. MAINTAIN AT JOB SITE: CONTRACT DOCUMENTS, REVIEWED SUBMITTALS, FIELD TEST RECORDS.
B. AS-BUILT DRAWINGS: NEATLY REVISE THE DESIGN DRAWINGS TO REFLECT THE AS-BUILT CONDITION. DIMENSIONALLY LOCATE SITE UTILITIES AND UNDER SLAB WORK. DELIVER AS-BUILT DRAWINGS TO ENGINEER AT PROJECT COMPLETION.

1.13 OPERATING & MAINTENANCE MANUAL
A. FORMAT: PDF.
B. CONTENTS: EACH SECTION SET OFF BY INDEX TABS. INCLUDE:
1. TABLE OF CONTENTS.
2. EXECUTED WARRANTIES.
3. NAME, ADDRESS AND TELEPHONE NUMBER OF INSTALLING CONTRACTORS AND SUBCONTRACTORS, ALONG WITH BRIEF DESCRIPTION OF THEIR PROJECT RESPONSIBILITY.
4. NAME, ADDRESS AND TELEPHONE NUMBER OF MATERIAL AND EQUIPMENT SUPPLIERS, ALONG WITH LISTING OF ITEMS SUPPLIED.
5. EQUIPMENT TABS, MINIMUM ONE TAB FOR EACH APPLICABLE DIVISION 22 SECTION, ARRANGED IN THE SAME ORDER AS THE SPECIFICATIONS. INCLUDE FOR ALL EQUIPMENT SUPPLIED:
A. REVIEWED SUBMITTALS.
B. INSTALLATION INSTRUCTIONS.
C. DRAWINGS AND SPECIFICATIONS.
D. MAINTENANCE INSTRUCTIONS.
E. PARTS LISTS.
F. COMPLETE WIRING AND TEMPERATURE CONTROL DIAGRAMS (AS-BUILT).
G. MARKED DRAWINGS INDICATING LOCATIONS OF CONCEALED COMPONENTS AND VARIATIONS FROM ORIGINAL SYSTEM DESIGN.
C. AT PROJECT COMPLETION SUBMIT ONE COPY OF MANUAL TO ENGINEER FOR REVIEW. MAKE ANY CORRECTIONS REQUIRED. TRANSMIT THREE CORRECTED COPIES TO GENERAL CONTRACTOR FOR DELIVERY TO OWNER.

1.14 WARRANTIES
A. PROVIDE ONE (1) YEAR WARRANTY ADDRESSED TO OWNER COVERING ALL DIVISION 22 WORK. PROVIDE CERTIFICATES FOR SUCH ITEMS OF EQUIPMENT WHICH HAVE WARRANTIES IN EXCESS OF ONE (1) YEAR.
B. INCLUDE EXECUTED WARRANTIES IN OPERATING & MAINTENANCE MANUALS.
C. DURING WARRANTY PERIOD, PROVIDE LABOR AND MATERIALS, INCLUDING SHIPPING, TO REPAIR OR REPLACE DEFECTS IN DIVISION 22 WORK. PAY FOR DAMAGE TO OTHER WORK RESULTING FROM DEFECTS IN DIVISION 22 WORK.

1.15 DEMONSTRATIONS
A. CONDUCT DEMONSTRATIONS WHEN SYSTEMS ARE COMPLETE AND OPERATIONAL AND READY TO BE TURNED OVER TO THE OWNER, AND AFTER THE OPERATING AND MAINTENANCE MANUAL IS COMPLETE.
B. INSTRUCT THE OWNER'S REPRESENTATIVE ONCE ON THE PROPER OPERATION AND MAINTENANCE OF THE MECHANICAL SYSTEMS. PAY PARTICULAR ATTENTION TO NORMAL AND EMERGENCY START-UP AND SHUT-DOWN PROCEDURES, SEASONAL CHANGE OVER, SAFETY DEVICES, AND TEMPERATURE CONTROL SYSTEMS.

END OF SECTION 22 00 10

SECTION 22 05 00 - BASIC MATERIALS AND METHODS

PART 1 GENERAL
1.01 WORK INCLUDED
THIS SECTION DESCRIBES MATERIALS AND METHODS COMMON TO THE WORK IN GENERAL FOR DIVISION 22.

PART 2 PRODUCTS
2.01 MOTORS, STARTERS, MISC. ELECTRICAL
A. MOTORS: MINIMUM HORSEPOWER AS INDICATED HEREIN OR ON DRAWINGS, CONSTRUCTED FOR OPERATION AT SITE ALTITUDE, RUST PROOF/LEAK PROOF BEARING RINGS, BUILT TO NEMA STANDARDS, FACTORY BALANCED, OPEN DRIP PROOF, THERMAL OVERLOAD PROTECTED, 1.15 SERVICE FACTOR AT ALTITUDE, POWER FACTOR CORRECTED IN ACCORDANCE WITH APPLICABLE ENERGY CODE, SUITABLE FOR OPERATION ON VOLTAGE INDICATED.
B. STARTERS: STARTERS OR SMALL MOTORS WITHOUT STARTERS SHALL HAVE THERMAL OVERLOAD PROTECTION IN EACH PHASE. ALL MAGNETIC STARTERS SHALL BE FURNISHED WITH TRANSFORMERS THAT PROVIDE 120V CONTROL VOLTAGE UNLESS ESTABLISHED BY OTHER MEANS. STARTERS SHALL INCLUDE TWO SETS OF AUXILIARY CONTACTS.

SECTION 22 05 00 - BASIC MATERIALS AND METHODS (cont'd)

2.02 PIPE SCHEDULE
A. WATER: COPPER TUBING PER ASTM B88, TYPE L, HARD DRAWN ABOVEGROUND AND ASTM B42, TYPE K UNDERGROUND. GRADE 95TA SOLDER JOINTS ABOVEGROUND AND AWS A5.8 SILVER BRAZED UNDERGROUND.
B. SANITARY WASTE AND VENT: UNDERGROUND:
B.A. CAST IRON ASTM A74 EXTRA HEAVY WEIGHT, HUB AND SPIGOT, CISPI HSB COMPRESSION TYPE WITH C564 NEOPRENE GASKETS.
B.B. PVC PIPE PER ASTM D2729 WITH SOLVENT WELD JOINTS PER ASTM D2855 USING ASTM D2564 SOLVENT CEMENT. FOLLOW ASTM D2321 GUIDELINES.
C. ABOVE GROUND: HUBLESS CAST IRON WITH HEAVY DUTY NO-HUB COUPLINGS.

2.03 PIPE HANGERS AND SUPPORTS
A. INSERTS: STEEL CASE AND EXPANDER PLUG FOR THREADED CONNECTION WITH LATERAL ADJUSTMENT, TOP SLOT FOR REINFORCING RODS AND LUGS FOR ATTACHING TO FORMS. SIZE TO MATCH HANGER ROD.
B. EXPANSION ANCHORS: LEAD SHIELD OR SLIDING EXPANSION TYPE WITH MACHINE BOLT. SIZE TO MATCH HANGER ROD.
C. BEAM CLAMPS: STEEL WITH CLAMPING BOLT AND JAMB NUT, CONFIGURED TO ATTACH SECURELY TO BEAM.
D. CLIP ANGLES: SHORT SECTION OF STEEL ANGLE WITH SUITABLE FASTENERS.
E. HANGER RODS: STEEL ALL-THREAD.
F. HANGERS:
1. INDIVIDUAL HANGERS: ADJUSTABLE WROUGHT STEEL RING FOR PIPING THROUGH 1-1/2". ADJUSTABLE WROUGHT STEEL CLEVIS FOR PIPING 2" AND LARGER. CHAIN OR PERFORATED STRAP HANGERS NOT PERMITTED.
2. TRAPEZE: INVERTED STEEL CHANNELS WITH WELDED PIPE SPACERS. PIPING MAY REST DIRECTLY ON TRAPEZE. SIZE HANGER RODS ONE SIZE LARGER THAN REQUIRED FOR LARGEST PIPE ON TRAPEZE. UNIFORMLY SPACE HANGER RODS MAXIMUM 3' ON CENTER. LOCATE PIPING ON TRAPEZE TO ALLOW FOR INSULATION AND THERMAL EXPANSION. SEE SECTION 22 07 00 - INSULATION.
G. WALL SUPPORTS: CAST IRON HOOK FOR PIPING THROUGH 3". WELDED STEEL WALL BRACKET WITH WROUGHT STEEL CLAMP FOR COLD PIPING 4" TO 6". SIZE IN ACCORDANCE WITH CODE AND TO ALLOW FOR INSULATION. SEE SECTION 22 07 00 - INSULATION.
H. RISER CLAMPS: STEEL, BOLT-TOGETHER, WITH SUPPORTING TABS. SIZE FOR UNINSULATED PIPE.
I. FLOOR STANDS:
1. BASE: CONCRETE PIER OR STEEL SUPPORT.
2. STAND: CAST IRON ADJUSTABLE SADDLE WITH PIPE NIPPLE RISER, LOCKNUT AND FLOOR FLANGE FOR PIPING THROUGH 5". ADJUSTABLE STEEL STAND AND CAST IRON ROLLER FOR PIPING 6" AND LARGER. SIZE IN ACCORDANCE WITH CODE AND TO ALLOW FOR INSULATION. SEE SECTION 22 07 00 - INSULATION.
J. MATERIALS: METALLIC PIPE HANGERS SHALL BE OF SAME MATERIAL AS BASE METAL OF PIPE.

2.04 SLEEVES, SAFING, AND ESCUTCHEONS
A. SLEEVES:
1. ROUND: STEEL PIPE SIZED LARGE ENOUGH TO ALLOW FOR UNINTERRUPTED INSULATION AND FOR MOVEMENT.
2. RECTANGULAR: GALVANIZED STEEL, REINFORCED TO PREVENT DEFORMATION.
B. SAFING:
1. WATERPROOF: ELASTIC MASTIC, SILICONE, ETC.
2. FIREPROOF: PLASTER, GROUT, OTHER MATERIAL AS APPROVED BY LOCAL AUTHORITIES.
C. ESCUTCHEONS
1. PIPING: ADJUSTABLE CHROME-PLATED, SOLID OR SPLIT, FLAT OR DISHED TO SUIT THE APPLICATION.
2. DUCTWORK: FABRICATED SHEET METAL.

2.05 VALVES
A. ACCEPTABLE MANUFACTURERS: CRANE, HAMMOND, JENKINS, KENNEDY, NIBCO, POWELL, STOCKHAM, GRINNELL.
B. GENERAL: ALL VALVES OF THE SAME TYPE SHALL BE OF ONE MANUFACTURER. USE VALVES LISTED WITH THE MANUFACTURERS STANDARDIZATION SOCIETY OF THE VALVE AND FITTING INDUSTRY.
C. ISOLATION VALVES:
1. 2" AND SMALLER: BALL VALVE; BRONZE, SWING-AWAY DESIGN, FULL PORT, BRONZE BALL, TEFLON SEAT, LEVER OPERATOR, SCREWED OR SOLDERED ENDS, 150# WSP, 400# WOG.
2. 2-1/2" AND LARGER: BUTTERFLY VALVE; MSS SP67, 200 PSI, DUCTILE IRON BODY WITH 2" EXTENSION TO ACCOMMODATE INSULATION, LUG OR WAFER BODY STYLE, STAINLESS STEEL STEM, LEVER-LOCK OPERATOR, EPDM SEALS.
D. CHECK VALVES:
1. SWING CHECK 4" AND SMALLER: BRONZE, SCREWED BONNET, HORIZONTAL SWING DISC, RENEWABLE DISC AND SEAT, SOLDER OR SCREWED ENDS, 150# WSP, 300# WOG.
E. BALANCING VALVES:
1. 2" AND SMALLER: PLUG COCKS OR ECCENTRIC VALVES OR BALL VALVES.
2. ALL SIZES: WITH ADJUSTABLE MEMORY STOP.
F. DRAIN VALVES:
1. BRONZE, COMPRESSION STOP WITH NIPPLE AND CAP OR HOSE THREAD OUTLET, 125# WSP.

2.06 UNIONS
A. FERROUS PIPING
1. 2" AND SMALLER: 150# MALLEABLE IRON GROUND JOINT, THREADED ENDS.
2. 2-1/2" AND LARGER: GRADE 1 150# FORGED STEEL SLIP ON OR WELD-NECK FLANGES IN ACCORDANCE WITH ASTM 181, REGULAR SQUARE-HEAD MACHINE BOLTS WITH HEAVY HEXAGONAL NUTS IN ACCORDANCE WITH ASTM A307 GRADE B, 1/16" THICK PRE-FORMED SYNTHETIC GASKETS.
B. COPPER PIPING
1. 2" AND SMALLER: WROUGHT COPPER IN ACCORDANCE WITH ANSI B16.22.
2. 2-1/2" AND LARGER: 150# BRONZE FLANGES, 1/16" THICK PRE-FORMED SYNTHETIC GASKETS.

2.07 PIPING SPECIALTIES
A. PRESSURE AND TEMPERATURE RELIEF VALVES
1. ACCEPTABLE MANUFACTURERS: WATTS, CRANE, CASH/ACME.
2. DESCRIPTION: ASME STAMPED, SUITABLY SIZED AND RATED TO PROTECT THE INTENDED SYSTEM AND EQUIPMENT.
B. THERMOMETERS
1. ACCEPTABLE MANUFACTURERS: SIKA, MOELLER, WEKSLER, WIKA.
2. DESCRIPTION: METAL CASE WITH COLORED-ALCOHOL FILLED GLASS OR PLASTIC READING TUBE WITH SUITABLE 9" SCALE, ADJUSTABLE MULTI-ANGLE HOUSING, BRASS SEPARABLE SOCKET.
C. EXPANSION TANK
1. ACCEPTABLE MANUFACTURERS: AMTROL, ITT BELL & GOSSETT, TACO.
2. DESCRIPTION: ASME STAMPED, WELDED STEEL WITH FLEXIBLE EPDM DIAPHRAGM OR BLADDER SEALED INTO TANK.
D. BACK FLOW PREVENTER
1. ACCEPTABLE MANUFACTURERS: WATTS, ZURN, CONBRACO.
2. DESCRIPTION: BRONZE BODY WITH BRONZE INTERNAL PARTS AND STAINLESS STEEL SPRINGS; TWO INDEPENDENTLY OPERATING, SPRING LOADED CHECK VALVES.
E. HEAT TRAPS
1. ACCEPTABLE MANUFACTURERS: CAMCO, UTILITECH, RHEEM, EASTMAN, RELIANCE.
2. PROVIDE WITH WATER HEATER OR USE DIELECTRIC HEAT TRAP FOR HW AND CW.
F. THERMOSTATIC MIXING VALVES
1. ACCEPTABLE MANUFACTURERS: LEONARD, HONEYWELL, ESBE
2. DESCRIPTION: BRASS CAST BODY, STAINLESS STEEL OR COPPER ALLOY BELLOWS, INTEGRAL TEMPERATURE ADJUSTMENT.

PART 3 - EXECUTION
3.01 MOTORS, STARTERS, AND MISC. ELECTRICAL
A. PROVIDE MOTORS OF MINIMUM HORSEPOWER INDICATED, COMPLETE WITH STARTERS, AND ACCESSORIES AS REQUIRED. INSTALL IN ACCORDANCE WITH MANUFACTURER'S INSTRUCTIONS.

3.02 PIPE HANGERS, SUPPORTS
A. GENERAL: ADEQUATELY SUPPORT PIPING FROM BUILDING STRUCTURE, TO MAINTAIN REQUIRED GRADES, TO PREVENT SAGGING. SUPPORT PIPING INDEPENDENTLY OF EQUIPMENT SO ITS WEIGHT WILL NOT BE SUPPORTED BY THE EQUIPMENT. PROVIDE SWAY BRACING WHERE NECESSARY. ISOLATE HANGERS AND SUPPORTS COMING IN CONTACT WITH BARE COPPER PIPE; USE DIELECTRIC HANGER CONNECTORS OR WRAP WITH NON-CONDUCTIVE TAPE.
B. HANGER SPACING:
1. SPACING SHALL BE IN ACCORDANCE WITH IPC TABLE 308.5.
2. TO PROVIDE 1/2" MINIMUM CLEARANCE BETWEEN INSULATION AND ADJACENT WORK.
3. SUPPORT HORIZONTAL CAST IRON PIPING NEAR EACH JOINT, MAXIMUM 5' ON CENTER.
4. SUPPORT VERTICAL CAST IRON PIPING AT EACH FLOOR INDEPENDENTLY OF CONNECTING HORIZONTAL PIPING WHERE PRACTICAL.
C. INSERTS: USE FOR CAST-IN-PLACE CONCRETE. SET IN PLACE PRIOR TO CONCRETE POUR. ATTACH INSERT TO RE-BAR IF INSERT WILL CARRY PIPING 4" AND OVER. WHERE CONCRETE WILL REMAIN EXPOSED, FINISH INSERTS FLUSH WITH EXPOSED SURFACE.

SECTION 22 05 00 - BASIC MATERIALS AND METHODS (cont'd)

D. EXPANSION ANCHORS: USE FOR PRECAST AND EXISTING CONCRETE. DRILL APPROPRIATE SIZE HOLE AND SECURELY SET ANCHOR. DO NOT CUT STRESSED CONCRETE REINFORCING. WHERE ARCHITECT ALLOWS, MAY DRILL THROUGH CONCRETE SLAB FROM BELOW AND PROVIDE HANGER ROD WITH RECESSED SQUARE STEEL PLATE AND NUT ABOVE SLAB.
E. BEAM CLAMPS: USE FOR STEEL BEAMS AND JOISTS, CLAMPED IN PLACE.
F. CLIP ANGLES: USE FOR STEEL BEAMS, WELDED IN PLACE. USE FOR WOOD BEAMS AND JOISTS, THROUGH-BOLTED IN PLACE WITH BACKER PLATE AND LOCK NUT.
G. HANGER RODS: SUSPENDED FROM INSERTS AND ANCHORS WITH JAMB NUT. SUSPENDED FROM CLAMPS AND ANGLES WITH TOP AND BOTTOM LOCK NUTS.
H. HANGERS: SUSPEND FROM RODS WITH TOP AND BOTTOM LOCK NUTS. ALLOW FOR AT LEAST 1-1/2" VERTICAL ADJUSTMENT.
I. WALL SUPPORTS: SECURELY ATTACH TO WALL USING INSERTS, EXPANSION ANCHORS, BOLTS, ETC. AS SUITS THE APPLICATION AND TO ASSURE A PERMANENT FASTENING.
J. RISER CLAMPS: LOCATE AT EACH FLOOR FOR RISERS WHICH EXTEND THROUGH MORE THAN ONE FLOOR AND FOR PIPING WHICH IS NOT ADEQUATELY SUPPORTED FROM BELOW.
K. FLOOR STANDS: USE FOR HORIZONTAL PIPING SUPPORTED FROM THE FLOOR. PROVIDE GENERAL CONTRACTOR WITH ANCHOR BOLTS AND SETTING TEMPLATES FOR CONCRETE PIERS.

3.03 SLEEVES, SAFING, AND ESCUTCHEONS
A. MAKE PENETRATIONS THROUGH BUILDING ELEMENTS AS FOLLOWS:
1. NEW CONCRETE: USE INDIVIDUAL SLEEVES CAST IN PLACE. ONLY ONE PIPE OR DUCT TO A SLEEVE; MULTIPLE PIPES/DUCTS IN A SLEEVE NOT ALLOWED. EXTENDED FLOOR SLEEVES 2" ABOVE FINISHED FLOOR, NOTCHED AS REQUIRED FOR RISER CLAMPS. CUT WALL SLEEVES FLUSH WITH WALL.
2. PRE-CAST AND EXISTING CONCRETE, SLEEVES NOT REQUIRED. SAW CUT OR CORE DRILL CONCRETE AS IN ACCORDANCE WITH CUTTING AND PATCHING HEREIN.
3. NEW MASONRY: SAME AS NEW CONCRETE.
4. EXISTING MASONRY: SAME AS EXISTING CONCRETE.
5. FRAME: SAME AS EXISTING CONCRETE.
B. PROVIDE SAFING IN ANNULAR SPACE BETWEEN PIPE/DUCT/INSULATION AND SLEEVE/OPENING AS FOLLOWS:
1. FOR UN-RATED CONCRETE FLOORS AND FOUNDATION WALLS USE WATERPROOF TYPE.
2. FOR FIRE-RATED CONSTRUCTION USE FIREPROOF TYPE FOR FULL THICKNESS OF THE CONSTRUCTION.
C. PROVIDE ESCUTCHEONS FOR PIPES AND DUCTS PASSING THROUGH WALLS, FLOORS AND CEILINGS IN FINISHED AREAS. PROVIDE TO COMPLETELY CONCEAL THE PENETRATION, TO BUTT TIGHTLY AGAINST THE WALL/FLOOR/CEILING AND THE PIPE/DUCT, AND TO YIELD A NEATLY FINISHED APPEARANCE. INSTALL PLATED ESCUTCHEONS AFTER WALL/FLOOR/CEILING HAS BEEN PAINTED.

3.04 VALVES
A. ORIENTATION: INSTALL WITH STEMS UPRIGHT OR HORIZONTAL, NOT INVERTED. INSTALL SWING CHECKS HORIZONTALLY OR IN UPFLOW VERTICAL PIPING, NOT DOWNFLOW VERTICAL.
B. SHUT-OFF AND ISOLATION: PROVIDE WHERE SHOWN, AT INLET AND OUTLET TO EACH PIECE OF EQUIPMENT, TO ISOLATE MAJOR HORIZONTAL BRANCHES, AT BASE OF VERTICAL RISERS. MAY OMIT WHERE BALANCING VALVE CAN BE USED FOR SHUT-OFF.
C. BALANCING: PROVIDE BALANCING VALVES WHERE SHOWN.
D. DRAINS: PROVIDE WHERE SHOWN, AT MAIN SHUT-OFF VALVES, AT LOW POINTS OF PIPING AND EQUIPMENT, TO ASSURE COMPLETE SYSTEM DRAIN-DOWN. LOCATE AT ACCESSIBLE POINTS WITHIN THE PIPING SYSTEM. USE DRAIN VALVES.

3.05 UNIONS
A. PROVIDE WHERE SHOWN, AT ALL EQUIPMENT AND CONTROL VALVE CONNECTIONS, FOR CONNECTION TO OTHER ITEMS REQUIRING REMOVAL FOR SERVICE/REPLACEMENT.
B. PROVIDE DIELECTRIC TYPE AT JUNCTIONS OF DISSIMILAR METALS.

3.06 PIPING SPECIALTIES
A. PRESSURE AND TEMPERATURE RELIEF VALVES: PROVIDE WHERE SHOWN AND TO ADEQUATELY PROTECT FIRED AND UNFIRED PRESSURE VESSELS AND PIPING SYSTEMS DESIGNED FOR OPERATION AT REDUCED PRESSURE. PIPE DISCHARGE TO A SAFE LOCATION. DO NOT PROVIDE ISOLATION VALVE BETWEEN RELIEF VALVE AND SYSTEM BEING PROTECTED.
B. THERMOMETERS: PROVIDE WHERE SHOWN, AT INLET AND OUTLET TO ALL FIRED PRESSURE VESSELS EXCEPT RESIDENTIAL-SIZED DOMESTIC WATER HEATERS, AT OUTLET FROM DOMESTIC WATER STORAGE TANKS AND STORAGE WATER HEATERS. AT PRIMARY AND SECONDARY INLET AND OUTLET TO CONVERTERS AND HEAT EXCHANGERS, DOWNSTREAM OF MAJOR MIXING VALVES. OMIT ON STEAM AND CONDENSATE SYSTEMS.

3.07 PIPE INSTALLATION
A. LOCATION: ROUTE PIPING GENERALLY AS INDICATED, PARALLEL WITH BUILDING ELEMENTS, IN AN ORDERLY MANNER. LOCATE CONCEALED UNLESS INDICATED OTHERWISE. ARRANGE TO CONSERVE HEADROOM AND TO CLEAR DOORS, WINDOWS AND OTHER OPENINGS.
B. INSTALLATION: INSTALL WITHOUT SPRING OR FORCING UNLESS COLD-SPRINGING IS INDICATED. MAKE CHANGES IN DIRECTION WITH FITTINGS. PROVIDE NECESSARY OFFSETS TO ACCOMMODATE OTHER WORK AND AS REQUIRED FOR EQUIPMENT FIT-UP. REAM AND CLEAN PRIOR TO JOINING. CAP OPEN ENDS TO PREVENT ENTRANCE OF FOREIGN MATERIAL.
C. GRADES: SLOPE ALL PIPING TO ALLOW FOR DRAINAGE IN ACCORDANCE WITH IPC 2015, TABLE 704.1.

SIZE	MINIMUM SLOPE
2-1/2" OR LESS	1/4"
3" TO 6"	1/8"
8" OR LARGER	1/16"

D. DRAINS: PROVIDE AT LOW POINTS IN WATER PIPING.
E. CLEARANCES: ALLOW FOR APPLICATION OF INSULATION AND FOR ACCESS TO VALVES, VENTS, DRAINS AND UNIONS. ALLOW FOR MINIMUM 1/2" CLEARANCE BETWEEN PIPES AFTER INSTALLATION.
F. BUILDING SETTLEMENT: PROVIDE SWING JOINTS AS NECESSARY TO PERMIT FREE BUILDING MOVEMENT WITHOUT CAUSING UNDUE PIPE STRESS OR DAMAGE TO BUILDING. PAY PARTICULAR ATTENTION TO PIPING CROSSING BUILDING EXPANSION JOINTS AND TO PIPING PENETRATING FLOORS, FOUNDATIONS, AND ROOF.
G. CONNECTIONS:
1. COPPER: SWEAT OR BRAZED AS IN ACCORDANCE WITH APPLICABLE DIVISION 22 SECTIONS.

3.08 PIPE TESTING
A. NEW PIPING: TEST ALL PIPING INSTALLED UNDER DIVISION 22. CONDUCT TESTS PRIOR TO CONCEALMENT OR INSULATING. NOTIFY ARCHITECT PRIOR TO CONDUCTING TESTS, TO ALLOW HIM TO OBSERVE TEST. PROVIDE ALL INSTRUMENTS AND EQUIPMENT REQUIRED TO CONDUCT TESTS. SEE APPROPRIATE DIVISION 22 SECTIONS FOR TESTING SPECIFICS AND PRESSURES.
B. EXISTING PIPING: ISOLATE FROM TEST PRESSURES USING ISOLATING VALVES, BLIND FLANGES, ETC. REPAIR ANY EXISTING PIPING DAMAGED DURING TESTING.
C. FIXTURES, EQUIPMENT: ISOLATE FROM TEST PRESSURES IF SUCH PRESSURE MAY DAMAGE THE FIXTURE/EQUIPMENT. USE ISOLATION VALVES, CAPS, ETC.
D. DURATION: HOLD HYDROSTATIC TESTS FOR 15 MINUTES MINIMUM WITHOUT PRESSURE LOSS. HOLD AIR TESTS FOR 15 MINUTES MINIMUM WITHOUT SIGNIFICANT PRESSURE LOSS. AIR TEST MAY BE SUBSTITUTED FOR HYDROSTATIC TEST IF APPROVED BY ARCHITECT.
E. RE-TESTING: CORRECT ANY WORK FAILING THE INITIAL TEST. RE-TEST IN ACCORDANCE WITH INITIAL TEST PROCEDURES.
F. FIELD RECORDS: MAINTAIN FOR ALL TESTS. SUBMIT TO ARCHITECT IN TRIPLICATE.

3.09 PIPE FLUSHING
FLUSH OR ROD OUT PIPING PRIOR TO MAKING FINAL CONNECTIONS, TO ASSURE REMOVAL OF FOREIGN MATERIAL. PROVIDE TEMPORARY CONNECTIONS, VALVES, ETC. AS MAY BE REQUIRED FOR THIS PURPOSE.

3.10 FLASHING AND COUNTERFLASHING
ROOF PENETRATIONS: FLASH AND COUNTERFLASH ROOF PENETRATION IN ACCORDANCE WITH ROOFING MANUFACTURER'S RECOMMENDATIONS.

3.11 CUTTING AND PATCHING
A. GENERAL: PERFORM AS REQUIRED FOR DIVISION 22 WORK. KEEP TO A MINIMUM THROUGH PROPER SCHEDULING. WHERE UNAVOIDABLE, PERFORM IN ACCORDANCE WITH APPLICABLE DIVISIONS. SEE DIVISION 1.
B. CUTTING: OBTAIN ARCHITECT'S APPROVAL PRIOR TO CUTTING OR DRILLING TO STRUCTURAL ELEMENTS. USE SAW OR ROTARY DRILL: DO NOT USE PNEUMATIC HAMMER.
C. PATCHING: SEAL OPENINGS, REPAIR, REFINISH, RESTORE DAMAGED ELEMENTS TO ORIGINAL CONDITIONS. COMPLY WITH PROVISIONS OF APPLICABLE DIVISIONS.

SECTION 22 05 00 - BASIC MATERIALS AND METHODS (cont'd)

3.12 ACCESS PANELS
FURNISH IN ACCORDANCE WITH DIVISION 8 AND WITH FIRE RATING COMPATIBLE WITH CEILING OR PARTITION RATING. FURNISH WHERE INDICATED AND AT LOCATIONS WHERE REQUIRED FOR ACCESS TO CONCEALED VALVES, DAMPERS, CLEANOUTS, CONTROL DEVICES, EQUIPMENT, OTHER ITEMS REQUIRING SERVICE/MAINTENANCE. DELIVER TO GENERAL CONTRACTOR FOR INSTALLATION UNDER OTHER DIVISIONS. PROVIDE INSTRUCTIONS FOR LOCATION.
3.13 ITEMS FURNISHED BY OTHERS
INSTALL IN ACCORDANCE WITH MANUFACTURES' DIRECTIONS AND AS REQUIRED BY APPLICABLE DIVISION 22 SECTIONS.

END OF SECTION 22 05 00

SECTION 22 07 00 - INSULATION

PART 1 - GENERAL

1.01 WORK INCLUDED
PROVIDE INSULATION AS SHOWN AND SPECIFIED HEREIN.

1.02 QUALITY ASSURANCE
A. FIRE HAZARD CLASSIFICATION: TESTED AS A COMPOSITE IN ACCORDANCE WITH ASTM E84 OR NFPA 255 OR UL723 AND SO LABELED. MAXIMUM FLAME SPREAD = 25, MAXIMUM SMOKE DEVELOPED = 50.
B. ENERGY CONSERVATION: COMPLY WITH 2015 INTERNATIONAL ENERGY CONSERVATION CODE.
C. PROHIBITED MATERIALS: PRODUCTS OR MATERIALS CONTAINING ASBESTOS ARE EXPRESSLY PROHIBITED.

PART 2 - PRODUCTS

2.01 PIPE INSULATION - MATERIALS
A. ACCEPTABLE MANUFACTURERS: MANVILLE, CERTAINTEED, OWENS-CORNING, AND ARMSTRONG.
B. FIBERGLASS: ASTM C547 TYPE 1, MAXIMUM K/INCH = 0.27 AT MEAN TEMPERATURE OF 75 DEGREES F. ALL SERVICE JACKET WITH SELF-SEALING LAPS. PRE-MOLDED FITTING AND VALVE COVERS WITH FIBERGLASS INSERTS.

PART 3 - EXECUTION

3.01 GENERAL
A. APPLY INSULATION AFTER SYSTEMS HAVE BEEN TESTED.
B. COMPLY WITH MANUFACTURER RECOMMENDATIONS REGARDING AMBIENT AND SYSTEM TEMPERATURES AND APPLICATION METHODS.
C. APPLY INSULATION TO CLEAN, DRY SURFACES.
D. APPLY INSULATION WITH SECTIONS OR EDGES FIRMLY BUTTED TOGETHER.
E. RUN INSULATION CONTINUOUS THROUGH SLEEVES AND OPENINGS IN WALLS AND FLOORS.
F. MAINTAIN INTEGRITY OF VAPOR BARRIER ON COLD SYSTEMS. AVOID THE USE OF STAPLES ON VAPOR BARRIER. SEAL ALL VAPOR BARRIER PENETRATIONS.
G. REPAIR INSULATION DAMAGED DUE TO STRAIN OR POOR WORKMANSHIP.
H. LEAVE SURFACE CLEAN AND READY FOR PAINTING.
I. INSULATION WHICH HAS BEEN APPLIED IN AN UNSIGHTLY MANNER WILL BE ORDERED REPLACED.

3.02 PIPE INSULATION - INSTALLATION
A. GENERAL
1. INSULATE PIPE, FITTINGS AND VALVES.
2. DO NOT INSULATE UNIONS, FLANGES, STRAINERS, FLEXIBLE CONNECTIONS, EXPANSION JOINTS. TERMINATE INSULATION NEATLY WITH INSULATION AND FINISHING CEMENT TROWELED ON A BEVEL.
3. INSULATE THROUGH HANGERS AND SUPPORTS. USE HEAVY DENSITY INSERT AND SHEET METAL SHIELD.
4. FOR COLD PIPING, SEAL FITTING/VALVE COVERS AT EACH END AND THROAT.
B. USE
1. INDOORS, ABOVE GROUND: FIBERGLASS WITH LONGITUDINAL SEAMS LOCATED AWAY FROM NORMAL LINES OF SIGHT.
2. OUTDOORS, ABOVE GROUND: FIBERGLASS WITH METAL JACKET SECURED WITH DRAW BANDS 12" ON CENTER AND SEALED WEATHER TIGHT. FOR HORIZONTAL PIPING LOCATE LONGITUDINAL SEAM AND DRAWBAND CLAMP ON UNDERSIDE OF PIPE. FOR GIRTH JOINTS IN VERTICAL PIPING, WRAP UPPER JACKET SECTION AROU

GENERAL NOTES

A. EACH UNIT SHALL HAVE A DOMESTIC COLD WATER ISOLATION BALL VALVE THAT IS ACCESSIBLE IN THE CEILING. LOCATE THE ISOLATION VALVE FOR THE UNIT IN THE HALLWAY, AND COORDINATE WITH ARCHITECTURAL CEILING PLANS THAT THERE IS LAY-IN CEILING AT THAT LOCATION.

KEYED NOTES

1. DISHWASHER DW-1 CONNECTION. INSTALL 1/2" TEE IN DOMESTIC HOT WATER (DHW). INCLUDE STOPPER VALVE FOR SUPPLY TO DISHWASHER.
2. GAS WATER HEATER. SUPPLY TO CLOTHES WASHERS AND COMMON AREA FIXTURES. SEE GAS PLAN M131 FOR GAS CONNECTION.
3. 1/2" CHECK VALVE AND BALANCING VALVE FOR HOT WATER RECIRCULATION (HWC). SET BALANCING VALVE TO 1 GPM. THIS VALVE SHALL HAVE ACCESS, EITHER WITH LAY-IN CEILING, OR ACCESS PANEL IN HARD CEILING.
4. 3/4" DOMESTIC HOT WATER (DHW) AND 1/2" HOT WATER RECIRCULATION (HWC) PIPE UP TO SECOND FLOOR. LOCATE PIPE IN CHASE. HOT WATER SUPPLY FROM GAS WATER HEATER IN WATER ENTRY ROOM.
5. DISHWASHER DW-2 CONNECTION. INSTALL 1/2" TEE IN DOMESTIC HOT WATER (DHW). INCLUDE STOPPER VALVE FOR SUPPLY TO DISHWASHER. TYPE A ADA UNITS 2 AND 11 HAVE ADA COMPLIANT DISHWASHERS.

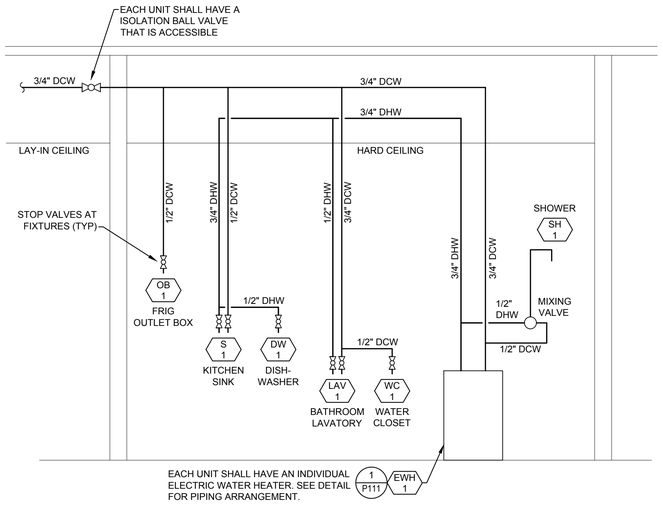

2 TYPICAL WATER SUPPLY SCHEMATIC PER UNIT

NOT TO SCALE

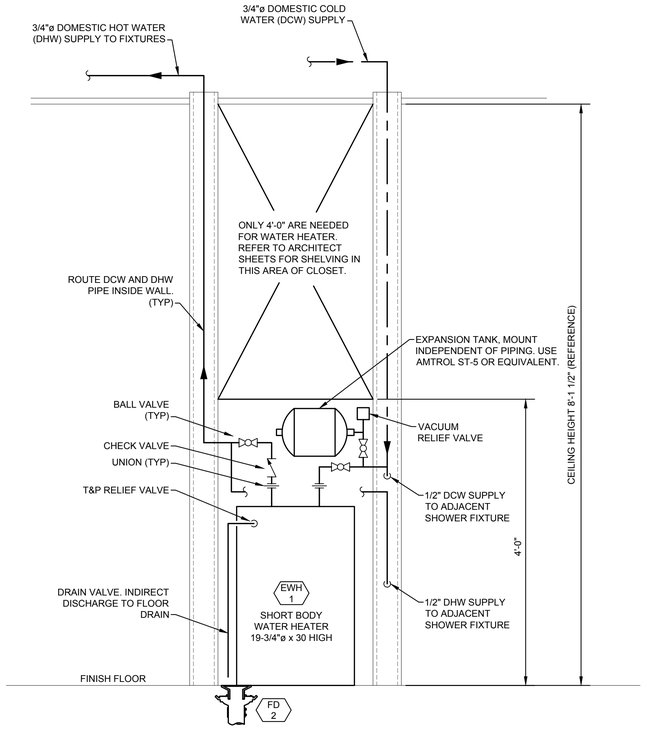

1 CLOSET WITH HOT WATER HEATER

SCALE: 1" = 1'-0"

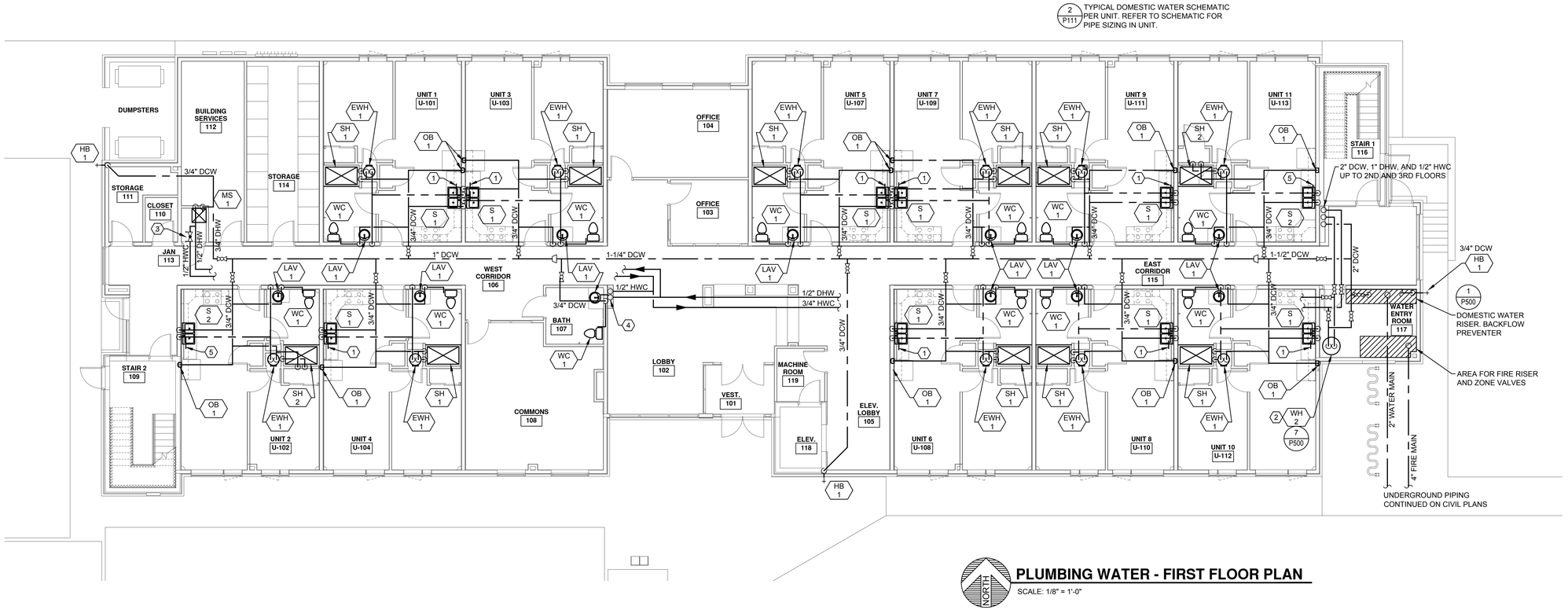

PLUMBING WATER - FIRST FLOOR PLAN

SCALE: 1/8" = 1'-0"

HGF ARCHITECTS INC.

PLANT ENGINEERING CONSULTANTS
320 W FILLMORE SUITE 100 COLORADO SPRINGS CO 80907
719 473 7077
www.plantecl.com

COLORADO REGISTERED PROFESSIONAL ENGINEER 32686 04/27/2020

PROJECT NUMBER:	19161
PHASE:	PERMIT SET
PHASE ISSUE DATE:	04/27/2020
DESIGNED BY:	RL/AO/MF
SCALE:	

PLUMBING WATER - FIRST FLOOR PLAN

SHEET ISSUE DATE: 04/27/2020

P111

THE RIGHT PLACE
CARDINAL CAPITAL MGMT.
A SUPPORTIVE HOUSING FACILITY

4/27/2020 4:38:31 PM james hollock
J:\projects\19161\19161 the right place\planning files\plumbing\19161_p111.dwg

GENERAL NOTES

A. EACH UNIT SHALL HAVE A DOMESTIC COLD WATER ISOLATION BALL VALVE THAT IS ACCESSIBLE IN THE CEILING. LOCATE THE ISOLATION VALVE FOR THE UNIT IN THE HALLWAY, AND COORDINATE WITH ARCHITECTURAL CEILING PLANS THAT THERE IS LAY-IN CEILING AT THAT LOCATION.

KEYED NOTES

1. DISHWASHER CONNECTION. INSTALL 1/2" TEE IN DOMESTIC HOT WATER (DHW). INCLUDE STOPPER VALVE FOR SUPPLY TO DISHWASHER.
2. 3/4" DOMESTIC HOT WATER (DHW) AND 1/2" HOT WATER RECIRCULATION (HWC) PIPE UP FROM FIRST FLOOR. LOCATE PIPE IN CHASE. HOT WATER SUPPLY FROM GAS WATER HEATER IN WATER ENTRY ROOM.
3. 1/2" CHECK VALVE AND BALANCING VALVE FOR HOT WATER RECIRCULATION (HWC). SET BALANCING VALVE TO 1 GPM. THIS VALVE SHALL HAVE ACCESS, EITHER WITH LAY-IN CEILING, OR ACCESS PANEL IN HARD CEILING.
4. TO REDUCE LIKELIHOOD OF FREEZING, INSTALL OUTLET BOXES IN WALLS THAT ARE NOT EXTERIOR WALLS AND WITHIN 5 FEET OF THE CORRESPONDING CLOTHES WASHER.

2 / P111 TYPICAL DOMESTIC WATER SCHEMATIC PER UNIT. REFER TO SCHEMATIC FOR PIPE SIZING IN UNIT.

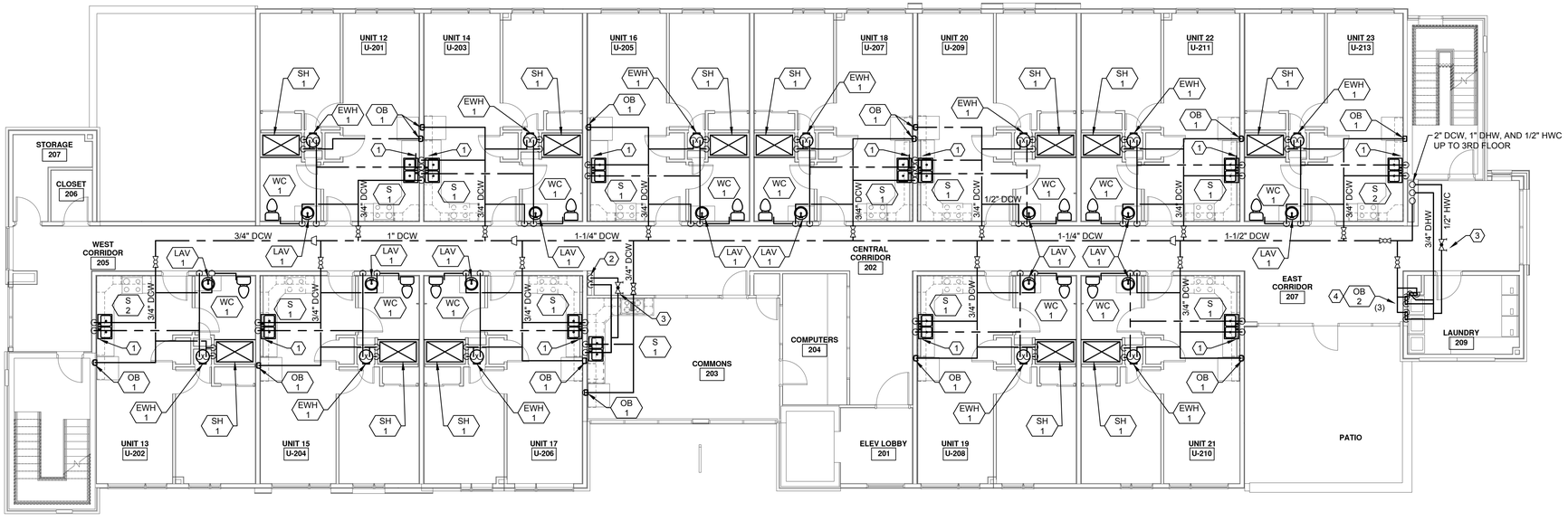

NORTH

PLUMBING WATER - SECOND FLOOR PLAN

SCALE: 1/8" = 1'-0"

HGF ARCHITECTS INC.

COLORADO REGISTERED PROFESSIONAL ENGINEER
04/27/2020

PLANT ENGINEERING CONSULTANTS
320 W FILLMORE SUITE 100 COLORADO SPRINGS CO 80907
719 473 7077
www.plantecl.com

PROJECT NUMBER: 19161
PHASE: PERMIT SET
PHASE ISSUE DATE: 04/27/2020
DESIGNED BY: RL/AO/MF
SCALE:

PLUMBING WATER - SECOND FLOOR PLAN

SHEET ISSUE DATE: 04/27/2020

P112

THE RIGHT PLACE CARDINAL CAPITAL MGMT.

A SUPPORTIVE HOUSING FACILITY

4/27/2020 4:38:34 PM james hollock
p:\projects\2019\19161 the right place\drawing files\plumbing\19161_p112.dwg

COMPARING DESGIN WITH 2015 ENTERPRISE GREEN COMMUNITIES, WATER CONSERVATION CHAPTER 4
DESIGNED WATER FIXTURES
WATER CLOSETS (TOILETS) HAVE A "WATER SENSE" LABEL AND A 1.28 GPF FLOWRATE
SHOWERHEADS HAVE A "WATER SENSE" LABEL AND ARE 1.5 GPM (BOTH STANDARD AND ADA SHOWERS)
KITCHEN FAUCET HAVE A 1.5 GPM FLOWRATE
LAVATORY FAUCET HAVE A "WATER SENSE" LABEL AND 0.50 GPM FLOWRATE

CONCLUSIONS:
DESIGN FULFILLS THE MANDATORY REQUIREMENTS OF SECTION 4.1
COMPARING TO OPTION 1 OF SECTION 4.2, THIS DESIGN WOULD QUALIFY FOR 2 POINTS
COMPARING TO OPTION 2 OF SECTION 4.2, SEE TABLE BELOW. WOULD QUALIFY FOR 4 POINT BY SAVING MORE THAN 30% PER BASELINE
THEREFORE 4 POINTS MAY BE CREDITED TO THE PLUMBING DESIGN

2015 ENTERPRISE GREEN COMMUNITIES CRITIERIA

SECTION 4.2 - ADVANCED WATER CONSERVATION - OPTION 2

PROJECT: 19161 - Right Place

UNIT TOTALS	
BEDROOMS	35
# OF PEOPLE	35

DAILY WATER CONSUMPTION

FIXTURE TYPE	BASELINE FLOWRATE	UNITS	PER PERSON USAGE	UNITS	BASELINE CONSUMPTION	ACTUAL FLOWRATE	UNITS	ACTUAL CONSUMPTION
SHOWER	2.5	GPM	6.15	MINUTES	538.1	1.5	GPM	322.9
LAVATORY	2.2	GPM	5.0	MINUTES	385.0	0.5	GPM	87.5
KITCHEN FAUCET	2.2	GPM	5.0	MINUTES	385.0	1.5	GPM	262.5
WATER CLOSET	1.6	GPF	5.05	FLUSHES	282.8	1.28	GPF	226.2
CLOTHES WASHER	13.2	GAL	1	PERSON	462.0	13.2	GAL	462.0
DISHWASHER (REGULAR)	5	GPC	0.1	CYCLES	17.5	5	GPC	17.5
				TOTALS (GAL)	2070.4		TOTAL (GAL)	1378.6
							CONSUMPTION SAVED (GAL)	691.8
							PERCENTAGE SAVED	33%

NOTES:
GPM=GALLONS PER MINUTE. GPF=GALLONS PER FLUSH. WF=WATER FACTOR. GPC=GALLON PER CYCLE
THE CLOTHES WASHER WAS CONSIDERED BASELINE, FOR THAT EQUIPMENT HAS NOT BE SELECTED BY OWNER.
DISHWASHER MANUFACTURER DID NOT INCLUDE GALLONS PER CYCLE, SO THE BASELINE WAS USED FOR CALCULATION.

GENERAL NOTES

A. EACH UNIT SHALL HAVE A DOMESTIC COLD WATER ISOLATION BALL VALVE THAT IS ACCESSIBLE IN THE CEILING. LOCATE THE ISOLATION VALVE FOR THE UNIT IN THE HALLWAY, AND COORDINATE WITH ARCHITECTURAL CEILING PLANS THAT THERE IS LAY-IN CEILING AT THAT LOCATION.

KEYED NOTES

1. DISHWASHER CONNECTION. INSTALL 1/2" TEE IN DOMESTIC HOT WATER (DHW). INCLUDE STOPPER VALVE FOR SUPPLY TO DISHWASHER.
2. 1/2" CHECK VALVE AND BALANCING VALVE FOR HOT WATER RECIRCULATION (HWC). SET BALANCING VALVE TO 1 GPM. THIS VALVE SHALL HAVE ACCESS, EITHER WITH LAY-IN CEILING, OR ACCESS PANEL IN HARD CEILING.
3. TO REDUCE LIKELIHOOD OF FREEZING, INSTALL OUTLET BOXES IN WALLS THAT ARE NOT EXTERIOR WALLS AND WITHIN 5 FEET OF THE CORRESPONDING CLOTHES WASHER.

2 / P111 TYPICAL DOMESTIC WATER SCHEMATIC PER UNIT. REFER TO SCHEMATIC FOR PIPE SIZING IN UNIT.

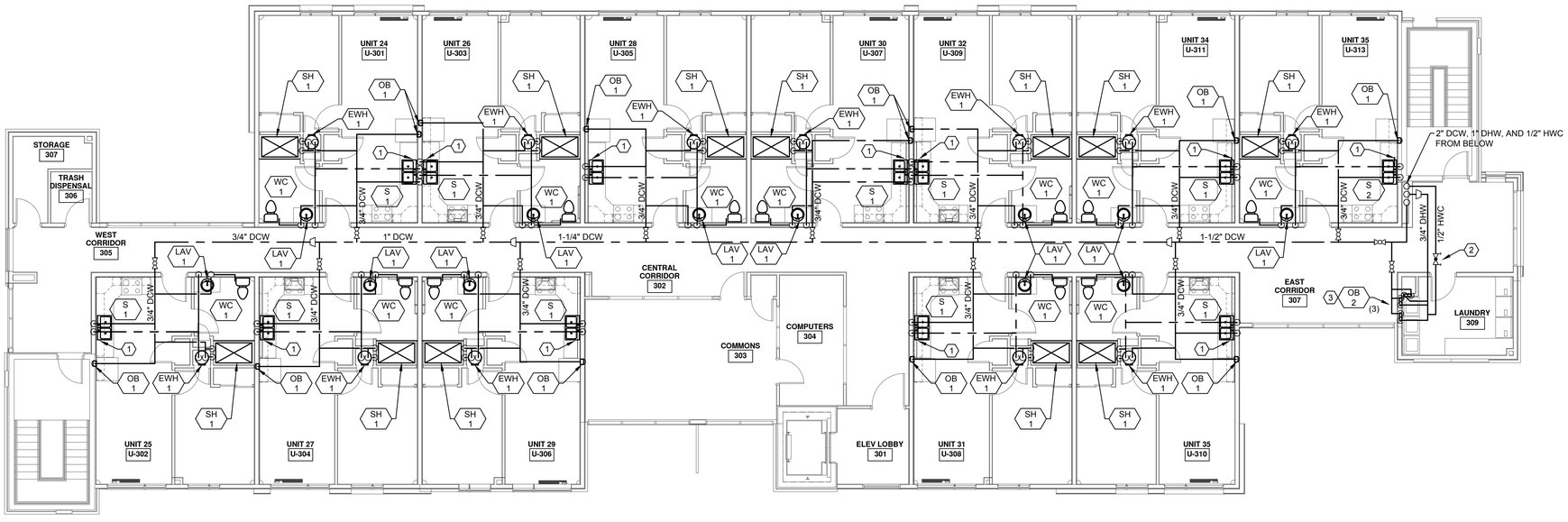

PLUMBING WATER - THIRD FLOOR PLAN

SCALE: 1/8" = 1'-0"

HGF ARCHITECTS INC.

PLANT ENGINEERING CONSULTANTS
320 W FILLMORE SUITE 100 COLORADO SPRINGS CO 80907
719 473 7077
www.plantecl.com

COLORADO REGISTERED P.E. R.D. LANG 32686 04/27/2020 PROFESSIONAL ENGINEER

PROJECT NUMBER: 19161
PHASE: PERMIT SET
PHASE ISSUE DATE: 04/27/2020
DESIGNED BY: RL/AO/MF
SCALE:

PLUMBING WATER - THIRD FLOOR PLAN

SHEET ISSUE DATE: 04/27/2020

P113

THE RIGHT PLACE
CARDINAL CAPITAL MGMT.
A SUPPORTIVE HOUSING FACILITY

4/27/2020 4:38:37 PM james hollock
J:\projects\19161\19161 the right place\Drawing Files\plumbing\19161_p113.dwg

GENERAL NOTES

A. THE CEILING SPACE ABOVE EACH UNIT TYPICALLY HAS 8" OF CLEAR SPACE AND 24" OF WOOD TRUSS. PLUMBING CONTRACTOR SHALL ROUTE SANITARY AND VENT PIPING THROUGH THE TRUSS AS MUCH AS POSSIBLE TO MAXIMIZE CLEAR SPACE UNDER THE TRUSS.

B. ALL SANITARY PIPE IN THE BUILDING SHALL BE SLOPED AT A MINIMUM OF 1/8" PER FOOT.

C. ALL SANITARY AND VENT PIPING SHALL BE PVC DRAIN-WASTE-VENT (DWV) WITH SOLID CORE.

D. SEE SANITARY ISOMETRICS ON SHEET P600 FOR PIPE SIZE AND RISER ROUTING.

KEYED NOTES

1. 4" SANITARY RISER AND 3" VENT RISER. RISER LOCATIONS ARE DESIGNED TO AVOID STRUCTURAL SHEAR WALLS. REFER TO PLUMBING ISOMETRICS ON SHEET P601.
2. ROOF DRAINS ARE TO ROUTED TO UNDERGROUND PIPE AND DISCHARGED INTO RETENTION/DETENTION AREA. SEE CIVIL SHEETS FOR PIPE ROUTING AND DISCHARGE POINT. UNDERGROUND PIPE SHALL BE SLOPED AT A MINIMUM OF 1/16" PER FOOT. CIVIL PLANS SHALL DEFINE INVERT DIMENSIONS.
3. 2" ELEVATOR SUMP PUMP DISCHARGE SHALL BE BE ROUTED TO BASE OF EXTERIOR WALL AND DISCHARGE INTO GRATED TRENCH. SEE ARCHITECTURAL SHEETS FOR TRENCH DETAIL. USE PAINTED PVC PIPE FOR EXTERIOR PIPE.
4. 2" ROOF DRAIN DISCHARGE SHALL BE ROUTED TO BASE OF EXTERIOR WALL AND DISCHARGE INTO GRATED TRENCH. SEE ARCHITECTURAL SHEETS FOR TRENCH DETAIL. USE PAINED PVC PIPE FOR EXTERIOR PIPE.

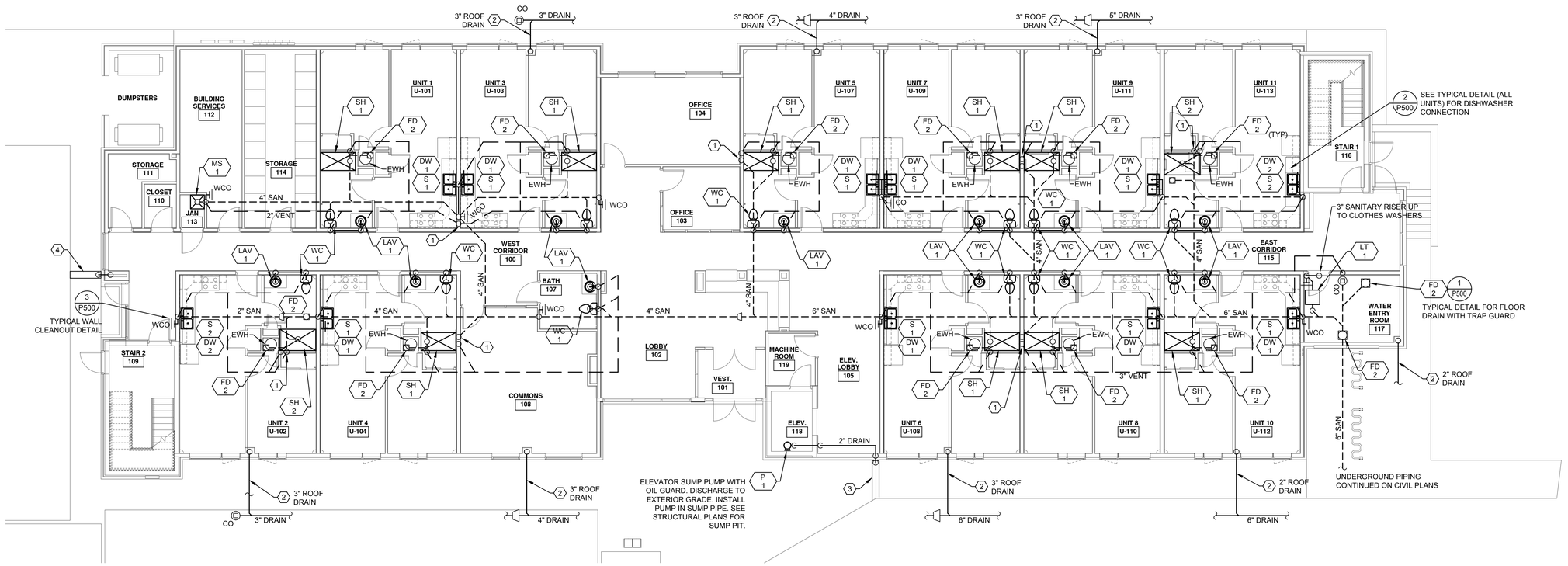

NORTH

PLUMBING SANITARY - FIRST FLOOR PLAN

SCALE: 1/8" = 1'-0"

HGF ARCHITECTS INC.

COLORADO REGISTERED PROFESSIONAL ENGINEER
R. S. LANDIS
32686
04/27/2020

PLANT ENGINEERING CONSULTANTS
320 W FILLMORE SUITE 100 COLORADO SPRINGS CO 80907
719 473 7077
www.plantecl.com

PROJECT NUMBER:	19161
PHASE:	PERMIT SET
PHASE ISSUE DATE:	04/27/2020
DESIGNED BY:	RL/AO/MF
SCALE:	

PLUMBING SANITARY - FIRST FLOOR PLAN

SHEET ISSUE DATE: 04/27/2020

P121

THE RIGHT PLACE
CARDINAL CAPITAL MGMT.
A SUPPORTIVE HOUSING FACILITY

4/27/2020 4:38:40 PM james hollock
J:\projects\19161\19161 the right place\dynamo_files\plumbing\19161_p121.dwg

GENERAL NOTES

A. THE CEILING SPACE ABOVE EACH UNIT TYPICALLY HAS 8" OF CLEAR SPACE AND 24" OF WOOD TRUSS. PLUMBING CONTRACTOR SHALL ROUTE SANITARY AND VENT PIPING THROUGH THE TRUSS AS MUCH AS POSSIBLE TO MAXIMIZE THE USE CLEAR SPACE UNDER THE TRUSS.

B. ALL SANITARY PIPE IN THE BUILDING SHALL BE SLOPED AT A MINIMUM OF 1/8" PER FOOT.

C. ALL SANITARY AND VENT PIPING SHALL BE PVC DRAIN-WASTE-VENT (DWV) WITH SOLID CORE.

D. SEE SANITARY ISOMETRICS ON SHEET P601 FOR PIPE SIZE AND RISER ROUTING.

KEYED NOTES

1. 4" SANITARY RISER AND 3" VENT RISER. RISER LOCATIONS ARE DESIGNED TO AVOID STRUCTURAL SHEAR WALLS. REFER TO PLUMBING ISOMETRICS ON SHEET P601.

2. STRUCTURAL LOCATION OF SHEAR WALL. INSTALL PLUMBING PER TYPICAL DETAIL 1 SHEET P123 TO AVOID THE SHEAR WALL COMPONENTS ON LOWER FLOOR.

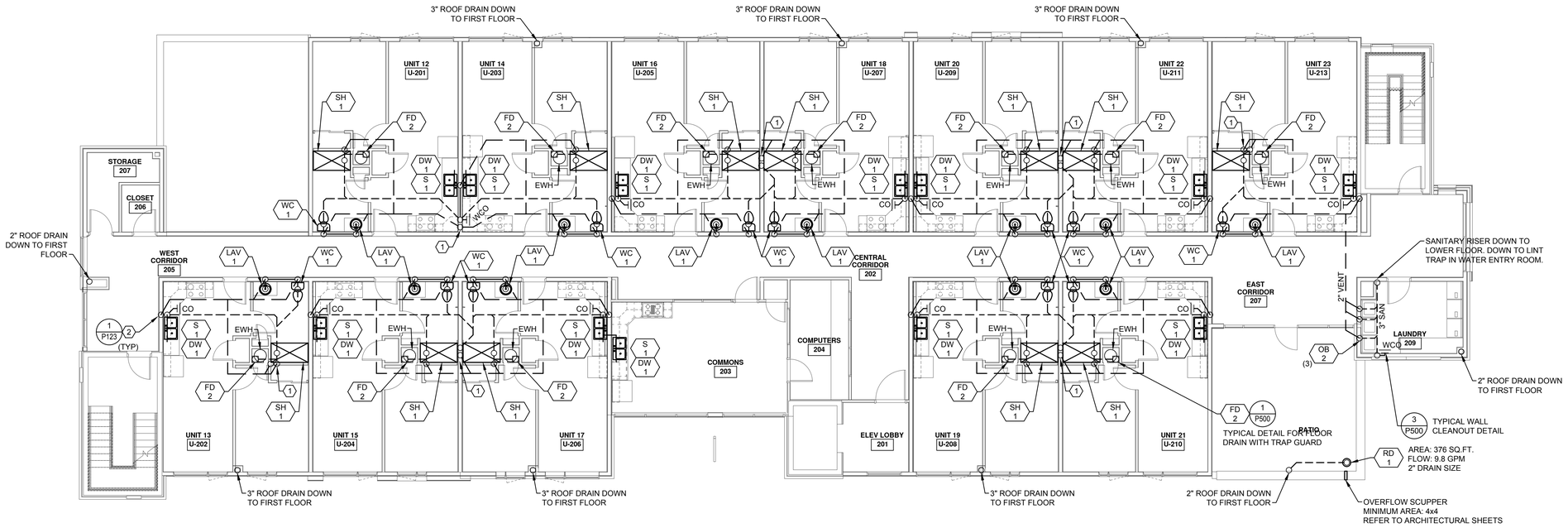

NORTH

PLUMBING SANITARY - SECOND FLOOR PLAN

SCALE: 1/8" = 1'-0"

HGF ARCHITECTS INC.

COLORADO REGISTERED PROFESSIONAL ENGINEER
04/27/2020

PLANT ENGINEERING CONSULTANTS
320 W FILLMORE SUITE 100 COLORADO SPRINGS CO 80907
719 473 7077
www.plantecl.com

PROJECT NUMBER:	19161
PHASE:	PERMIT SET
PHASE ISSUE DATE:	04/27/2020
DESIGNED BY:	RL/AO/MF
SCALE:	

PLUMBING SANITARY - SECOND FLOOR PLAN

SHEET ISSUE DATE: 04/27/2020

P122

THE RIGHT PLACE CARDINAL CAPITAL MGMT.

A SUPPORTIVE HOUSING FACILITY

4/27/2020 4:38:43 PM james hallock
p:\projects\2019\19161 the right place\drawing files\plumbing\19161_p122.dwg

GENERAL NOTES

A. THE CEILING SPACE ABOVE EACH UNIT TYPICALLY HAS 8" OF CLEAR SPACE AND 24" OF WOOD TRUSS. PLUMBING CONTRACTOR SHALL ROUTE SANITARY AND VENT PIPING THROUGH THE TRUSS AS MUCH AS POSSIBLE TO MAXIMIZE THE USE CLEAR SPACE UNDER THE TRUSS.

B. ALL SANITARY PIPE IN THE BUILDING SHALL BE SLOPED AT A MINIMUM OF 1/8" PER FOOT.

C. ALL SANITARY AND VENT PIPING SHALL BE PVC DRAIN-WASTE-VENT (DWV) WITH SOLID CORE.

D. SEE SANITARY ISOMETRICS ON SHEET P601 FOR PIPE SIZE AND RISER ROUTING.

KEYED NOTES

1. 4" SANITARY RISER AND 3" VENT RISER. RISER LOCATIONS ARE DESIGNED TO AVOID STRUCTURAL SHEAR WALLS. REFER TO PLUMBING ISOMETRICS ON SHEET P601.

2. STRUCTURAL LOCATION OF SHEAR WALL. INSTALL PLUMBING PER TYPICAL DETAIL 1 SHEET P123 TO AVOID THE SHEAR WALL COMPONENTS ON LOWER FLOOR.

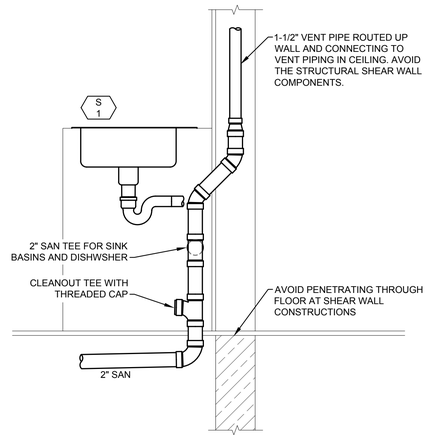

1 SANITARY AND VENT PIPING AT SHEAR WALL

SCALE: 1" = 1'-0"

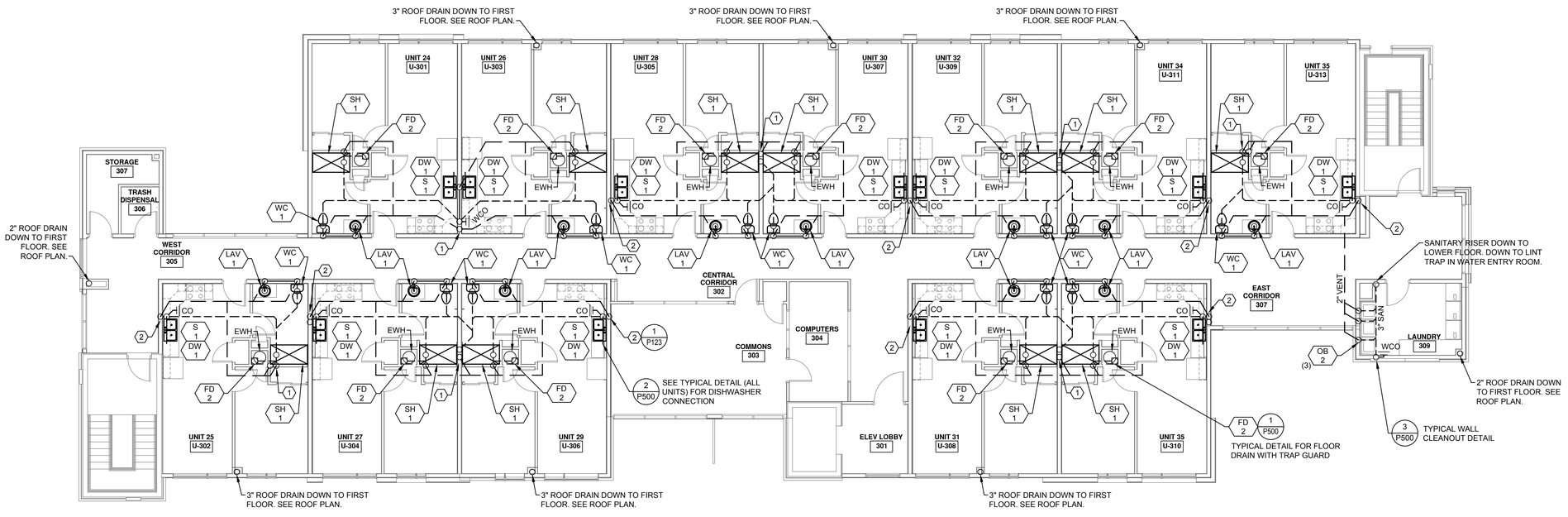

PLUMBING SANITARY - THIRD FLOOR PLAN

SCALE: 1/8" = 1'-0"

HGF ARCHITECTS INC.

COLORADO REGISTERED PROFESSIONAL ENGINEER
RYAN S. D. LINDO
32686
04/27/2020

PLANT ENGINEERING CONSULTANTS
320 W FILLMORE SUITE 100 COLORADO SPRINGS CO 80907
719 473 7077
www.plantecl.com

PROJECT NUMBER:	19161
PHASE:	PERMIT SET
PHASE ISSUE DATE:	04/27/2020
DESIGNED BY:	RL/AO/MF
SCALE:	

PLUMBING SANITARY - THIRD FLOOR PLAN

SHEET ISSUE DATE: 04/27/2020

P123

THE RIGHT PLACE
CARDINAL CAPITAL MGMT.
A SUPPORTIVE HOUSING FACILITY

4/27/2020 4:38:47 PM james hollock
C:\Projects\19161 the right place\Arkansas files\plumbing\19161_p123.dwg

GENERAL NOTES

A. SEE P121 FIRST FLOOR SANITARY PLANS FOR THE CONTINUATION OF THE ROOF DRAIN PIPING.

B. ALL ROOF DRAIN PIPING THAT IS HORIZONTAL SHALL BE SLOPED AT A MINIMUM OF 1/8" PER FOOT.

C. SIZING OF ROOF DRAINS ARE PER INTERNATIONAL PLUMBING CODE, SECTIONS 1106 AND 1108, ALONG WITH TABLE 1106.2.

KEYED NOTES

1. EACH ROOF DRAIN AREA SHALL HAVE A OVERFLOW SCUPPER LOCATED IN THE SAME LOCATION (ROOF LOW POINT) AS THE PIPED PRIMARY ROOF DRAIN. MINIMUM SIZE OF SCUPPER ON PLANS. MINIMUM SIZE OF SCUPPER OPENING SHALL BE 4"x4" PER CODE.
REFER TO ARCHITECTURAL SHEETS FOR PENETRATION THROUGH PARAPET.

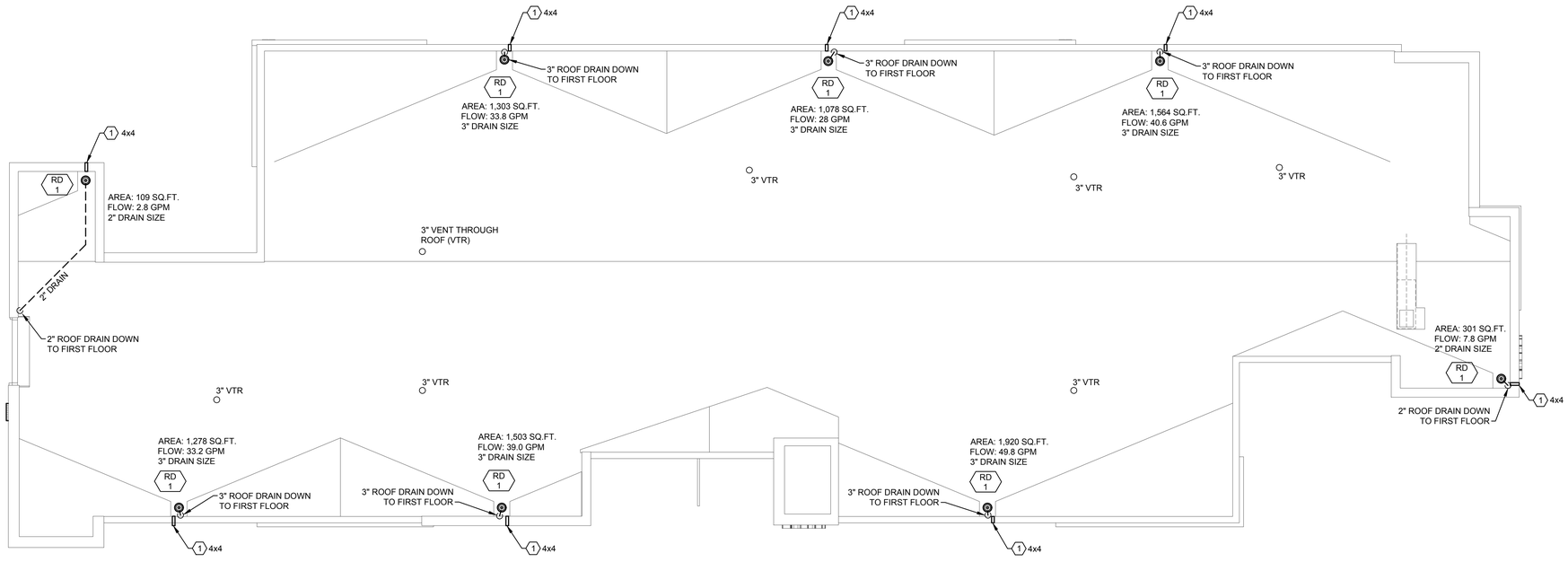

NORTH

PLUMBING - ROOF PLAN

SCALE: 1/8" = 1'-0"

HGF ARCHITECTS INC.

COLORADO REGISTERED PROFESSIONAL ENGINEER
04/27/2020

PLANT ENGINEERING CONSULTANTS
320 W FILLMORE SUITE 100 COLORADO SPRINGS CO 80907
719 473 7077
www.plantec.com

PROJECT NUMBER:	19161
PHASE:	PERMIT SET
PHASE ISSUE DATE:	04/27/2020
DESIGNED BY:	RL/AO/MF
SCALE:	

PLUMBING - ROOF PLAN

SHEET ISSUE DATE: 04/27/2020

P124

THE RIGHT PLACE
CARDINAL CAPITAL MGMT.

A SUPPORTIVE HOUSING FACILITY

4/27/2020 4:38:49 PM james hollock
p:\projects\2019\19161 the right place\drawing files\plumbing\19161_p124.dwg

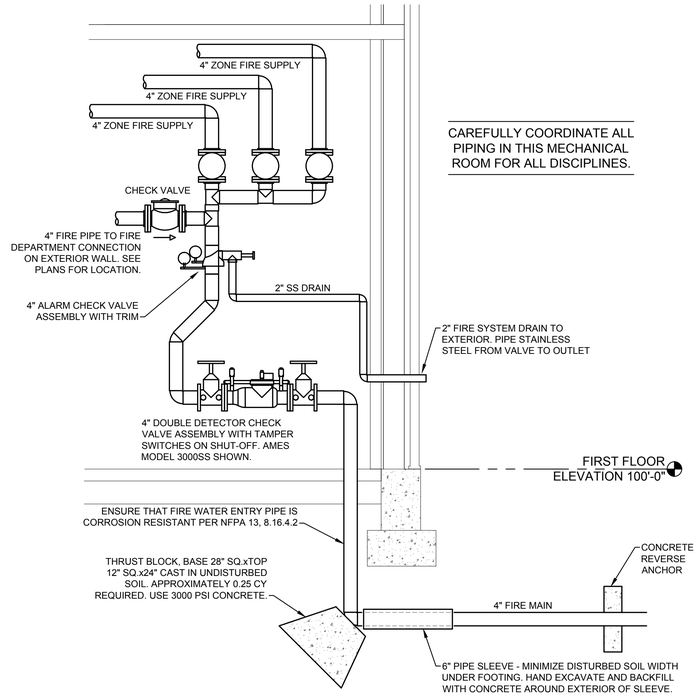

CAREFULLY COORDINATE ALL PIPING IN THIS MECHANICAL ROOM FOR ALL DISCIPLINES.

1 GENERIC FIRE RISER DETAIL

NOT TO SCALE

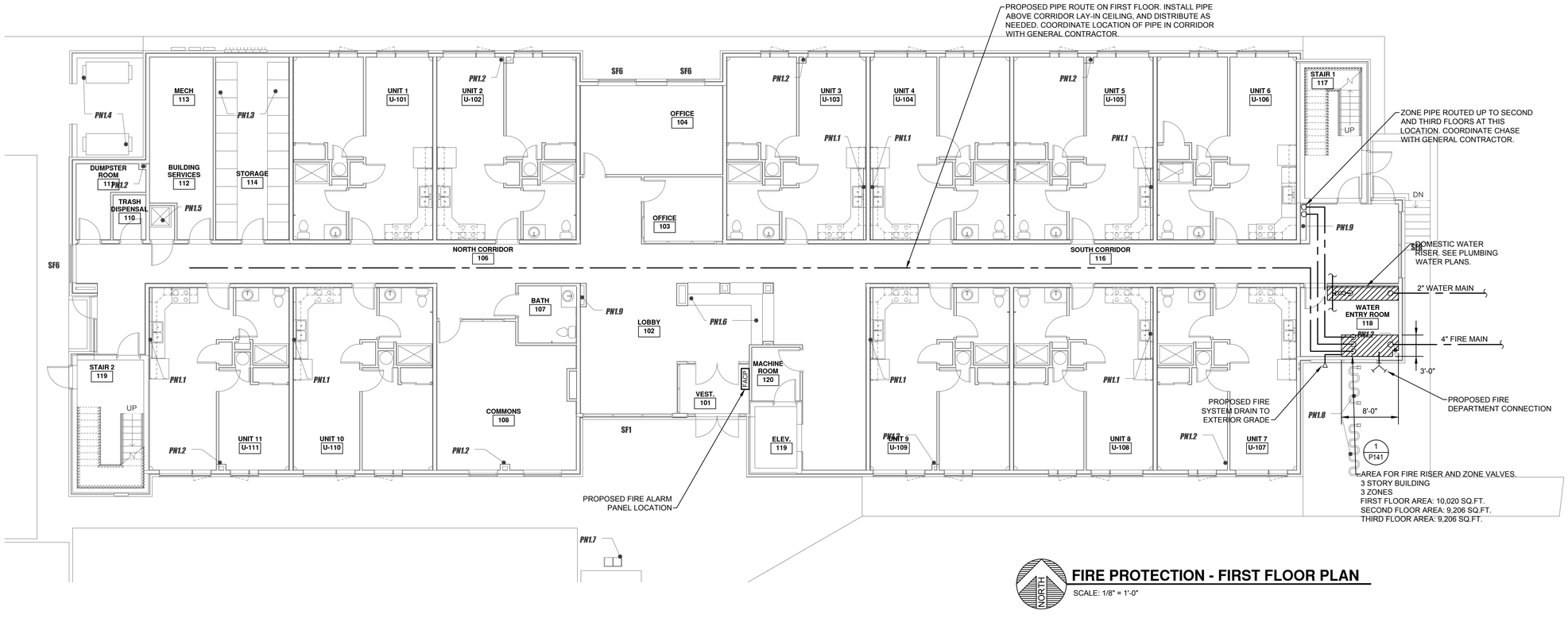

FIRE PROTECTION - FIRST FLOOR PLAN

SCALE: 1/8" = 1'-0"

FIRE PROTECTION GENERAL NOTES

A. THESE FIRE PROTECTION SHEETS PRODUCED BY THE PLUMBING ENGINEER ARE A PERFORMANCE SPECIFICATION ONLY, FOR GENERAL ARRANGEMENT, AND OUTLINE OF SCOPE OF WORK. THE FIRE PROTECTION CONTRACTOR SHALL DESIGN THE SYSTEM, INCLUDING SIZING AND ROUTING THE FIRE PROTECTION PIPES. AREA HAS BEEN RESERVED FOR THE FIRE RISER IN THE WATER ENTRY ROOM.

B. THE SCOPE OF WORK OF THIS PROJECT IS TO PROVIDE A NEW AUTOMATIC WET PIPE SPRINKLER SYSTEM TO SERVE THE ENTIRE BUILDING THAT COMPLIES WITH THE LATEST EDITION OF NFPA-13.

C. THE BUILDING IS A MULTI-USE FACILITY PRIMARILY FOR LIVING QUARTERS. REFER TO THE ARCHITECTURAL PLANS FOR USE AND OCCUPANCY DATA.

D. SPRINKLER CONTRACTOR SHALL BE RESPONSIBLE FOR VERIFYING AND OBTAINING ALL DATA REQUIRED FOR THE DESIGN. THE SPRINKLER CONTRACTOR SHALL BE RESPONSIBLE FOR DEVELOPMENT & OBTAINING APPROVALS OF WORKING DRAWINGS FROM JURISDICTIONAL AUTHORITIES PRIOR TO INSTALLATION.

E. WORK SHALL BE EQUAL OR SUPERIOR TO THAT REQUIRED BY LATEST EDITION OF NFPA-13, IFC, IBC, AND RULES, CODES, ORDERS, REGULATIONS, ORDINANCES AND LAWS IMPOSED BY JURISDICTIONAL AUTHORITIES.

F. THE SPRINKLER CONTRACTOR SHALL COORDINATE THE FIRE PROTECTION DESIGN AND INSTALLATION WITH ALL OTHER TRADES AND DISCIPLINES TO ENSURE THAT NO INTERFERENCE EXISTS BETWEEN THE FIRE PROTECTION SYSTEM AND THE WORK OF OTHER TRADES, EQUIPMENT AND SYSTEMS DESIGNED AND INSTALLED BY OTHERS. FIRE PROTECTION PIPING SHALL FIT ABOVE DESIGNATED CEILING SPACE. ALL PIPING AND EQUIPMENT INSTALLED WITHOUT COORDINATION SHALL BE RELOCATED AT FIRE PROTECTION CONTRACTOR'S EXPENSE. CONTRACTOR SHALL BE RESPONSIBLE FOR ENSURING THAT PIPING, SPRINKLER HEADS AND ALL FIRE SPRINKLER EQUIPMENT FITS INTO THE SPACE PROVIDED.

G. REFER TO THE ARCHITECTURAL, STRUCTURAL, MECHANICAL AND ELECTRICAL DRAWINGS FOR REFLECTED CEILING PLANS AND STRUCTURAL SUPPORT DRAWINGS. ALL SPRINKLER PIPING AND HEAD LOCATIONS SHALL BE COORDINATED THROUGH THE GENERAL CONTRACTOR PRIOR TO INSTALLATION.

H. SUBMITTED CALCULATIONS SHALL INCLUDE FLOW TEST DATA USED. FLOW TEST DATA OBTAINED FROM LOCAL AUTHORITIES MAY BE USED IF THE TEST HAS BEEN MADE WITHIN THREE MONTHS OF PROJECT START DATE.

I. HYDRAULIC CALCULATIONS SHALL BE BASED ON 90% OF THE FLOW TEST PRESSURE DATA.

J. PLANS AND CALCULATIONS SHALL BE SUBMITTED BY THE CONTRACTOR TO THE AUTHORITY HAVING JURISDICTION FOR APPROVAL. THE OCCUPANCY GROUP SHALL BE SHOWN ON THE DRAWINGS. THE AFOREMENTIONED APPROVED SUBMITTALS SHALL BE SUBMITTED TO THE ARCHITECT FOR FINAL APPROVAL.

K. INTERFACE FIRE PROTECTION SYSTEM WITH THE NEW BUILDING FIRE AND SMOKE ALARM SYSTEM.

L. ALL PIPING PENETRATIONS THROUGH FLOORS SHALL BE SEALED COMPLETELY WATER-TIGHT. SEAL ALL SLAB PENETRATIONS WATER-TIGHT.

M. ENSURE THAT ALL SPRINKLER PIPE HANGER ATTACHMENTS USED ON THIS PROJECT CONFORM TO NFPA 13 STANDARDS AND ARE LISTED FOR FIRE SPRINKLER USE. ENSURE THAT WHEN ATTACHING SPRINKLER PIPE HANGERS THE LISTED METHOD OF INSTALLATION IS FOLLOWED.

HGF ARCHITECTS INC.

COLORADO REGISTERED PROFESSIONAL ENGINEER
32686
04/27/2020
PROFESSIONAL ENGINEER

PLANT ENGINEERING CONSULTANTS
320 W FILLMORE SUITE 100 COLORADO SPRINGS CO 80907
719 473 7077
www.plantecl.com

PROJECT NUMBER: 19161
PHASE: PERMIT SET
PHASE ISSUE DATE: 04/27/2020
DESIGNED BY: RL/AO/MF
SCALE:

FIRE PROTECTION - FIRST FLOOR PLAN

SHEET ISSUE DATE: 04/27/2020

P141

THE RIGHT PLACE
A SUPPORTIVE HOUSING FACILITY
CARDINAL CAPITAL MGMT.

4/27/2020 4:38:53 PM james hollock
J:\projects\19161\19161 the right place\planning files\plumbing\19161_p141.dwg

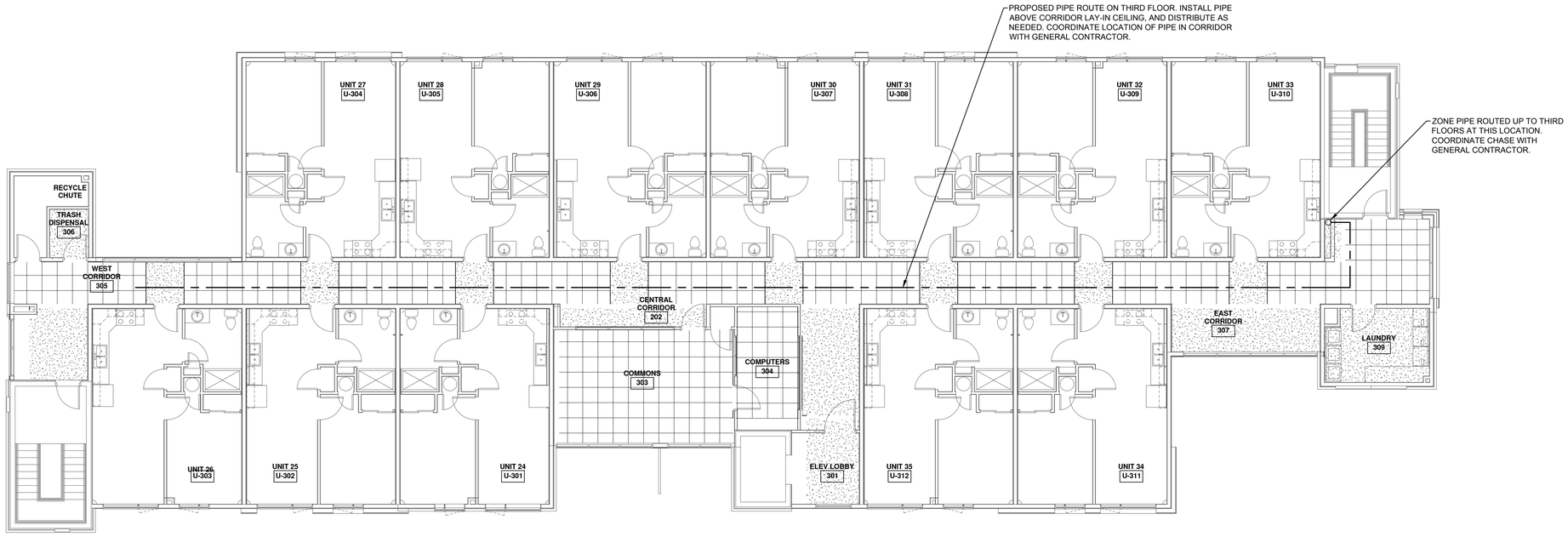

FIRE PROTECTION - THIRD FLOOR PLAN

SCALE: 1/8" = 1'-0"

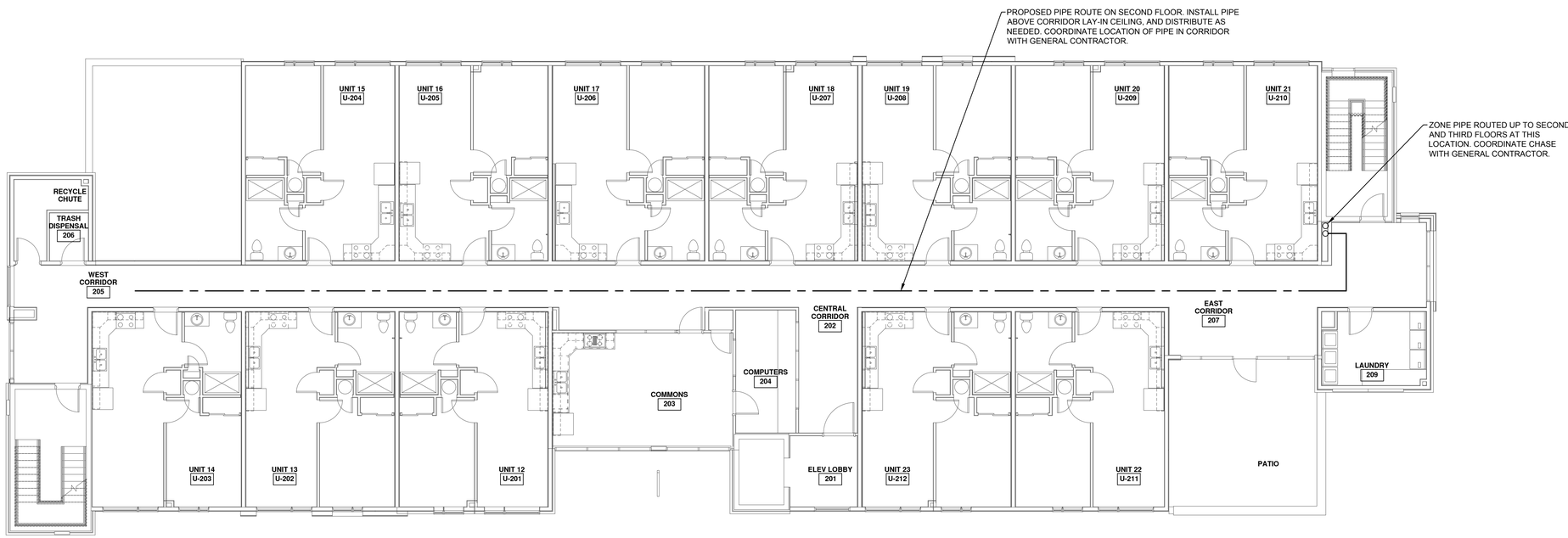

FIRE PROTECTION - SECOND FLOOR PLAN

SCALE: 1/8" = 1'-0"

HGF ARCHITECTS INC.

COLORADO REGISTERED PROFESSIONAL ENGINEER
04/27/2020

PLANT ENGINEERING CONSULTANTS
320 W FILLMORE SUITE 100 COLORADO SPRINGS CO 80907
719 473 7077 www.plantecl.com

PROJECT NUMBER:	19161
PHASE:	PERMIT SET
PHASE ISSUE DATE:	04/27/2020
DESIGNED BY:	RL/AO/MF
SCALE:	

FIRE PROTECTION - SECOND AND THIRD FLOOR PLANS

SHEET ISSUE DATE: 04/27/2020

P142

THE RIGHT PLACE
CARDINAL CAPITAL MGMT.

A SUPPORTIVE HOUSING FACILITY

4/27/2020 4:38:56 PM james hollock
p:\projects\2019\19161 the right place\drawing files\plumbing\19161_p142.dwg

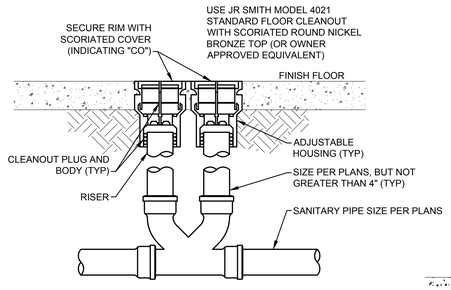

5 TWO-WAY CLEANOUT DEAIL

NOT TO SCALE

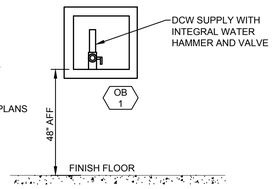

4 FRIG OUTLET BOX

NOT TO SCALE

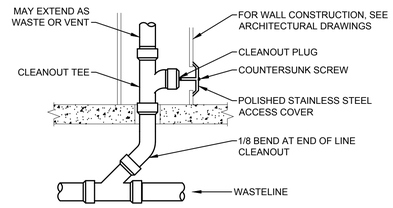

3 WALL CLEANOUT

NOT TO SCALE

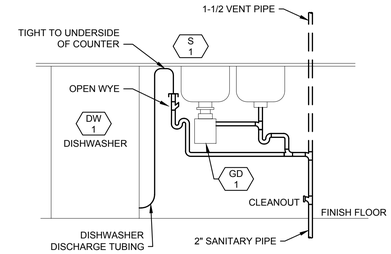

NOTE.
KITCHEN SINK IN UNITS 6 AND 11 ON THE FIRST FLOOR ARE TO BE FULL ADA UNITS. DO NO INSTALL A GARBAGE DISPOSAL ON THOSE KITCHEN SINKS. COORDINATE WITH THE ARCHITECTURAL PLANS TO DETERMINE THE ADA REQUIREMENTS ON THE PLUMBING UNDER THE SINK. INSTALL OFFSET P-TRAPS TO CREATE THE REQUIRED CLEARANCE FOR THE ADA UNDER THE SINK.

2 KITCHEN SINK WITH DISHWASHER

NOT TO SCALE

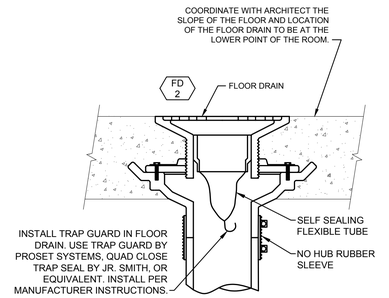

1 FLOOR DRAIN WITH TRAP GUARD

NOT TO SCALE

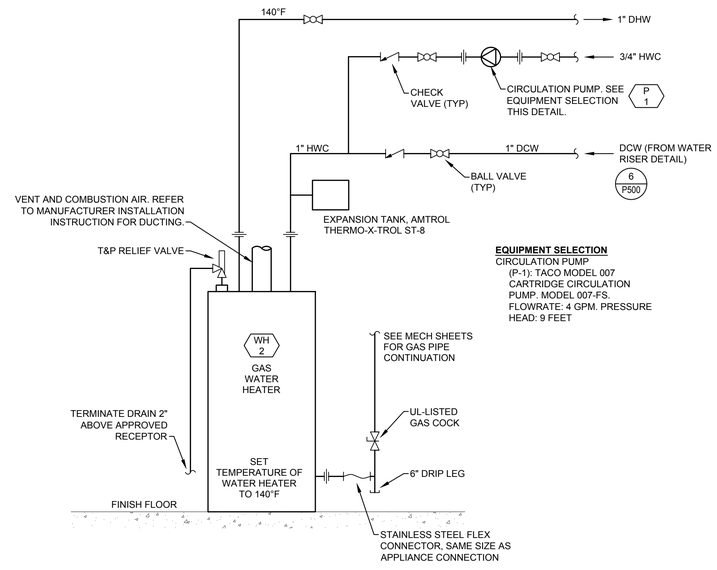

EQUIPMENT SELECTION
CIRCULATION PUMP
(P-1): TACO MODEL 007 CARTRIDGE CIRCULATION PUMP. MODEL 007-FS. FLOWRATE: 4 GPM. PRESSURE HEAD: 9 FEET

7 GAS WATER HEATER SERVING CLOTHES WASHERS

NOT TO SCALE

EQUIPMENT SELECTION
PRESSURE REGULATOR VALVE:
(PRV-1): ZURN MODEL 500XL OR OWNER APPROVED EQUIVALENT.
2" SIZE. SET REGULATOR TO 50 PSI.
(PRV-2): ZURN MODEL 70XL OR OWNER APPROVED EQUIVALENT.
1" SIZE. SET REGULATOR TO 55 PSI.
SEE HYDRAULIC CALCULATION TABLE (THIS SHEET) FOR PRESSURE CALCULATION.
BACKFLOW PREVENTER SELECTION:
(BFP-1): 2" REDUCED PRESSURE PRINCIPLE TYPE. ZURN MODEL 975XL2 OR OWNER APPROVED EQUIVALENT.
(BFP-2): 3/4" REDUCED PRESSURE PRINCIPLE TYPE. ZURN MODEL 975XL2 OR OWNER APPROVED EQUIVALENT.

WATER ENTRY AND METER INSTALLATION SHALL CONFORM TO THE CITY DEFINED REQUIREMENTS AND STANDARDS. PLUMBING CONTRACTOR SHALL INSTALL PER CURRENT CITY CODE.

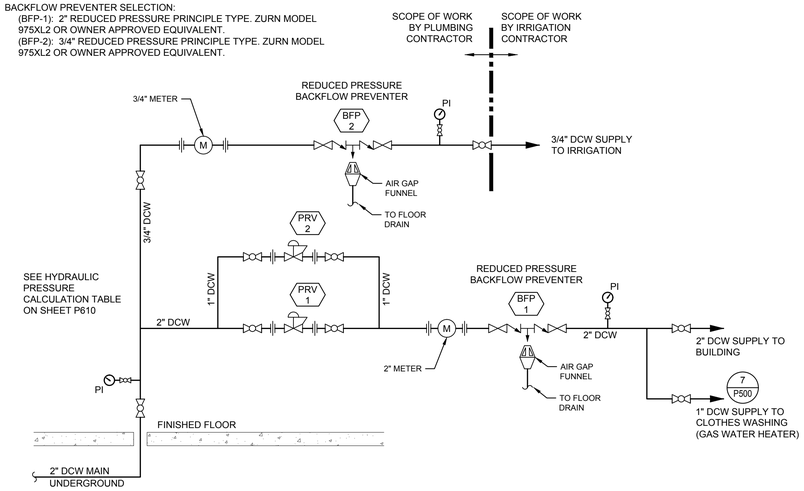

6 DOMESTIC WATER SCHEMATIC - WATER SUPPLY MAIN

NOT TO SCALE

HGF ARCHITECTS INC.

COLORADO REGISTERED PE 32686 R.E.B.O LICENSED 04/27/2020 PROFESSIONAL ENGINEER

PLANT ENGINEERING CONSULTANTS
320 W FILLMORE SUITE 100 COLORADO SPRINGS CO 80907
719 473 7077
www.plantecl.com

PROJECT NUMBER: 19161
PHASE: PERMIT SET
PHASE ISSUE DATE: 04/27/2020
DESIGNED BY: RL/AO/MF
SCALE:

PLUMBING DETAILS

SHEET ISSUE DATE: 04/27/2020

P500

THE RIGHT PLACE
CARDINAL CAPITAL MGMT.
A SUPPORTIVE HOUSING FACILITY

4/27/2020 4:35:58 PM james hollock
K:\Projects\2019\19161 the right place\drawing files\plumbing\19161_p500.dwg

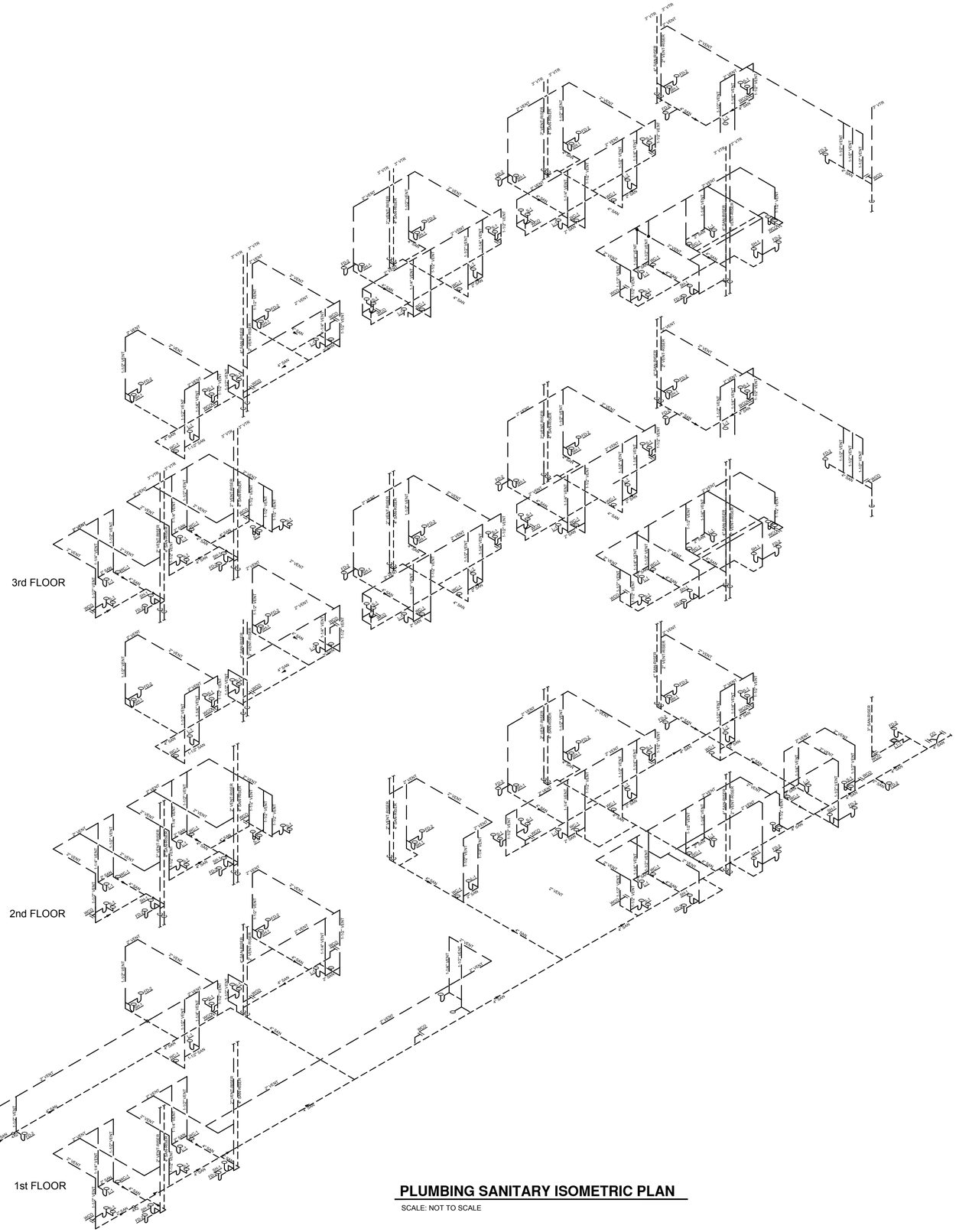

PLUMBING SANITARY ISOMETRIC PLAN

SCALE: NOT TO SCALE

HGF ARCHITECTS INC.

COLORADO REGISTERED PROFESSIONAL ENGINEER
32686
04/27/2020

PLANT ENGINEERING CONSULTANTS
320 W FILLMORE SUITE 100 COLORADO SPRINGS CO 80907
719 473 7077
www.plantecl.com

PROJECT NUMBER:	19161
PHASE:	PERMIT SET
PHASE ISSUE DATE:	04/27/2020
DESIGNED BY:	RL/AO/MF
SCALE:	

PLUMBING SANITARY ISOMETRIC PLAN

SHEET ISSUE DATE: 04/27/2020

P600

THE RIGHT PLACE
CARDINAL CAPITAL MGMT.

A SUPPORTIVE HOUSING FACILITY

4/27/2020 4:39:01 PM james hollock
p:\projects\2019\19161 the right place\drawing files\plumbing\19161_p600.dwg

PLUMBING FIXTURE SCHEDULE

MARK	DESCRIPTION		MINIMUM CONNECTION SIZE (in.) WASTE	VENT	COLD WATER	HOT WATER	NOTES
DW-1	DISHWASHER	ENERGY STAR COMPLIANT	1-1/2"	1-1/4"			(8)
	MANF., MODEL	GE, MODEL GDF530PGMWW, WHITE					
		PROVIDE WITH DRAIN HOSE AND ELECTRICAL CONNECTION					
DW-2	DISHWASHER	ENERGY STAR COMPLIANT, ADA COMPLIANT	1-1/2"	1-1/4"			(8)
	MANF., MODEL	GE, MODEL GDT225SGLWW, WHITE					
		PROVIDE WITH DRAIN HOSE AND ELECTRICAL CONNECTION					
FD-2	FLOOR DRAIN	2" FLOOR DRAIN	2	1-1/2			
	TYPE	ROUND GRATE, ADJUSTABLE HEAD					
	FIXTURE MANUF, MODEL	J.R. SMITH, 2005Y-02-(A)-HP-U					
	ACCESSORIES	INCLUDE TRAP GUARD (SEE DETAIL)					
GD-1	GARBAGE DISPOSAL	LOCATED UNDER S-1	2"				(5)
		IN-SINK-ERATOR BADGER, 1/3 HP, 115 VOLTS					
		INCLUDE WALL SWITCH CONTROLS, COORDIANTE WITH ELECTRICAL					
HB-1	HOSE BIBB	FREEZELESS HOSE BIBB WITH LOCKING COVER			3/4"		
	MANF., MODEL	WOODFORD, MODEL B67					
		INTEGRAL ANTI-SIPHON, 3/4" THEADED NOZZLE					
LAV-1	LAVATORY	COUNTERTOP LAY-IN TYPE	1-1/2"	1-1/4"	1/2"	1/2"	(5)
	MANUF., MODEL, COLOR	AMERICAN STANDARD, AQUALYN 0476.028, VITREOUS CHINA WHITE					
		4" CENTERS, SELF RIMMING OVAL, FRONT OVERFLOW					
	FAUCET MANUF., MODEL	DELTA FAUCET, 520LF-HGMHDF MODEL, 4" CENTERS, 0.5 GPM					
		FAUCET TO INCLUDE METAL POP-UP DRAIN					
		MCGUIRE 8872C P-TRAP AND 165 WHEEL HANDLE SUPPLY/STOP					
LT-1	LINT TRAP		3"	1-1/2"			
	MANUF., MODEL	ZURN, Z1185-#7. LINT TRAP FOR 7 CLOTHES WASHING MACHINES					
		INSTALL RECESSED IN FLOOR AND FLUSH WITH FLOOR, 25x25 OVERALL					
		INSTALL SO THAT SEDIMENT BUCKET MAY BE REMOVED FOR MAINTENANCE					
MS-1	MOP SINK		3	1-1/2	1/2	1/2	
	TYPE	FLOOR-MOUNTED, 24" SQUARE, WITH WALL-MOUNT FAUCET ON 8" CENTERS					
	MANUF., MODEL, COLOR	FIAT, MSB2424, 24x24 MOLDED STONE					
	FAUCET MANUF, MODEL	DELTA COMMERCIAL, 28C9LH, WALL-MOUNT W PAIL HOOK, 4 GPM, ROUGH CHROME					
	ACCESSORIES	INCLUDE STAINLESS STEEL WALL GUARDS AND EDGE CAPS					
OB-1	OUTLET BOX	OUTLET BOX FOR REFRIGERATOR ICE MACHINE			1/2"		
	MANUF., MODEL	OATLEY, 38493. DCW SUPPPLY ONLY					
		QUARTER TURN BALL VALVE WITH WATER HAMMER AND 6FT HOSE					
		ASSUME PEX PIPING USED. COORDINATE WITH PIPE MATERIAL USED					
OB-2	OUTLET BOX	OUTLET BOX FOR WASHING MACHINE	2"	1-1/2"	1/2"	1/2"	
	MANUF., MODEL	OATLEY, 38544. DCW, DHW, AND WASTE.					
		QUARTER TURN BALL VALVE WITH WATER HAMMER AND 6FT HOSE					
		ASSUME PEX PIPING USED. COORDINATE WITH PIPE MATERIAL USED					
RD-1	ROOF DRAIN - PRIMARY						(7)
	MANUF, MODEL	ZURN, Z100-NH, NO HUB CONNECTION					
		DURA-COATE CAST IRON BODY AND POLYDOME GUARD					
S-1	KITCHEN SINK	DROP-IN STAINLESS STEEL, DOUBLE BOWL	2"	1-1/2"	1/2"	1/2"	(6)
	MANUF., MODEL, FINISH	JUST MANUFACTURING, MODEL DL-ADA-2137-A-GR					
		TWO 16x16x6-1/2 BOWLS, STAINLESS STEEL, 3 HOLE PUNCH, 4" CENTERS					
		DRAIN LOCATED IN CENTER					
	FAUCET	DELTA, MODEL 100LF-HDF, SINGLE HANDLE, 4" CENTERS, 1.5 GPM					
	ACCESSORIES	INCLUDE PERFORATED GRID STRAINERS IN CHROME					
		INCLUDE P-TRAP AND WHEEL HANDLE SUPPLY/STOPS					
		INCLUDE GARBAGE DISPOSAL GD-1, AS SCHEDULED					
S-2	KITCHEN SINK	ADA TYPE A ROLL-UNDER KITCHEN SINK	2"	1-1/2"	1/2"	1/2"	(4) (6)
		SAME AS S-1 BUT HAS NO GARBAGE DISPOSAL AND THE DRAIN					
		IS LOCATED IN THE CENTER REAR ON JUST SINK					
SH-1	SHOWER		2"	1-1/2"	1/2"	1/2"	(2) (5)
	MANUF., MODEL	AQUATIC, A2 COMPOSITE 6030CS, 60x30 OVERALL					
	FAUCET	DELTA SHOWER ONLY TRIM, MODEL T13H13, 1.5 GPM					
	ACCESSORIES	FAUCET TO INCLUDE MIXING ROUGH VALVE R10000					
		INCLUDE SHOWER DRAIN					
SH-2	ADA ROLL-IN SHOWER		2"	1-1/2"	1/2"	1/2"	(2) (3) (5)
	MANUF., MODEL, FINISH	AQUATIC, 16034BFSC ACCESSIBLE SHOWER, 62x37 OVERALL					
		ADA CODE COMPLIANT SOLID ONE-PIECE SHOWER UNIT WITH ADA APPURTENANCES					
	FAUCET	DELTA T13H332 DUAL SHOWER VALVE ASSEMBLY					
	ACCESSORIES	INCLUDE SHOWER DRAIN					
		FAUCET TO INCLUDE MIXING ROUGH VALVE R10000					
WC-1	WATER CLOSET	FLOOR MOUNTED TANK TYPE, ADA COMPLIANT	4"	2"	1/2"		(1) (5)
	MANUF., MODEL, COLOR	AMERICAN STANDARD, CADET PRO RIGHT HEIGHT 215AA.104					
		VITREOUS CHINA WHITE, ELONGATED BOWL, 1.28 GPF					
		WHITE MOLDED WOOD SEAT, BRASS CRAFT ANGLE STOPS					

NOTES:
(1) ORDER TANKS FOR THE WATER CLOSETS WITH THE FLUSH LEVER TOWARDS THE ADJACENT LAVATORY.
(2) ORDER SHOWERS THAT HAVE THE DRAIN (RIGHT OR LEFT) ACCORDING SANITARY DRAWINGS.
(3) SHOWER AND SHOWER HEAD TO BE INSTALLED PER ADA GUIDELINES.
(4) GARBAGE DISPOSAL WILL NOT FIT UNDER ADA ROLL-UNDER KITCHEN SINK. DO NOT INSTALL IN ADA TYPE A APARTMENT UNITS 2 AND 11.
(5) FIXTURE MUST HAVE THE "WATER SENSE" LABEL TO QUALIFY FOR ENTERPRISE GREEN COMMUNITIES
(6) TO QUALIFY FOR ENTERPRISE GREEN COMMUNITIES, KITCHEN SINK AND SHOWER MUST BE 2.0 GPM OR LESS.
(7) SIZE OF ROOF DRAIN DEFINED BY PLUMBING PLANS
(8) MUST BE ENERGY STAR COMPLIANT TO QUALIFY FOR ENTERPRISE GREEN COMMUNITIES

PLUMBING FIXTURE UNIT TABULATION

FIXTURE (IPC E103.3(2) AND 709.1)	TOTAL FIXTURES	CW SUPPLY PER FIXTURE	CW SUPPLY TOTAL UNITS	HW SUPPLY PER FIXTURE	HW SUPPLY TOTAL UNITS	TOTAL SUPPLY PER FIXTURE	TOTAL SUPPLY TOTAL UNITS	DRAINAGE UNITS PER FIXTURE	DRAINAGE UNITS TOTAL UNITS
FIRST FLOOR									
SHOWER - PRIVATE	11	1	11	1	11	1.4	15.4	2	22
DISHWASHING MACHINE	11	0	0	1.4	15.4	1.4	15.4	2	22
HOSE BIBB	2	5	10	0	0	5	10	0	0
FRIG OUTLET BOX (ICEMAKER)	11	0.25	2.75	0	0	0.25	2.75	0	0
FLOOR DRAIN - EMERGENCY	15	0	0	0	0	0	0	0	0
KITCHEN SINK - PRIVATE	11	1	11	1	11	1.4	15.4	2	22
LAVATORY	12	0.5	6	0.5	6	0.7	8.4	1	12
MOP SINK	1	2.25	2.25	2.25	2.25	3	3	2	2
WATER CLOSET, FLUSH TANK, PRIVATE	12	2.2	26.4	0	0	2.2	26.4	3	36
SECOND FLOOR									
SHOWER - PRIVATE	12	1	12	1	12	1.4	16.8	2	24
DISHWASHING MACHINE	13	0	0	1.4	18.2	1.4	18.2	2	26
FRIG OUTLET BOX (ICEMAKER)	13	0.25	3.25	0	0	0.25	3.25	0	0
FLOOR DRAIN - EMERGENCY	12	0	0	0	0	0	0	0	0
KITCHEN SINK - PRIVATE	13	1	13	1	13	1.4	18.2	2	26
LAVATORY	12	0.5	6	0.5	6	0.7	8.4	1	12
WASHING MACHINE - 8 LB PUBLIC	3	2.25	6.75	2.25	6.75	3	9	2	6
WATER CLOSET, FLUSH TANK, PRIVATE	12	2.2	26.4	0	0	2.2	26.4	3	36
THIRD FLOOR									
SHOWER - PRIVATE	12	1	12	1	12	1.4	16.8	2	24
DISHWASHING MACHINE	12	0	0	1.4	16.8	1.4	16.8	2	24
FRIG OUTLET BOX (ICEMAKER)	12	0.25	3	0	0	0.25	3	0	0
FLOOR DRAIN - EMERGENCY	12	0	0	0	0	0	0	0	0
KITCHEN SINK - PRIVATE	12	1	12	1	12	1.4	16.8	2	24
LAVATORY	12	0.5	6	0.5	6	0.7	8.4	1	12
WASHING MACHINE - 8 LB PUBLIC	3	2.25	6.75	2.25	6.75	3	9	2	6
WATER CLOSET, FLUSH TANK, PRIVATE	12	2.2	26.4	0	0	2.2	26.4	3	36
	TOTALS		**202.95**		**155.15**		**294.2**		**372**

CW FIXTURE UNITS **294.2** **@ 210 FEET DEVELOPMENT LENGTH**
PER 2015 IPC TABLE E201.1 **PROVIDE 2" MAIN (2" METER) AND 2" DISTRIBUTION PIPE**

DRAINAGE FIXTURE UNITS **372**
PER 2015 IPC TABLE 710.1(1) **REQUIRES 6" SANITARY MAIN**

ELECTRIC WATER HEATER SCHEDULE

MARK	MANUFACT.	MODEL	TANK SIZE	TEMP. SETPOINT	AREA SERVED	STORAGE (GAL)	DCW INLET	ELECTRICAL WATTS	RECOV. AT 90°F RISE (GAL/HR)	EF	NOTES
EWH-1	RHEEM	XE30S06ST38U1	SHORT	120F	INDIVIDUAL UNITS	27	1/2"	3,800	17	0.95	(1) (2) (3) (4) (5)

NOTE:
(1) PROVIDE EXPANSION TANK (AMTROL THERM-X-TROL ST-5 OR EQUVALENT). SEE DETAIL 1 ON SHEET P111
(2) FOR OWNER TO QUALIFY FOR ENERGY STAR CERTIFICATION, THE WATER HEATER MUST HAVE A UEF >= 0.93 OR AN EF >= 0.95
(3) SIZE OF WATER HEATER IS CRITICAL TO FIT IN THE CLOSET SPACE PROVIDE. DIAMETER = 19-3/4" AND HEIGHT = 30"
(4) COORDINATE WITH ELECTRICAL CONTRACTOR FOR THE VOLTAGE AND PHASE FOR ELECTRICAL CONNECTIONS ON UNIT.
(5) INSTALL PER MANUFACTURER'S INSTRUCTIONS.

GAS WATER HEATER SCHEDULE

MARK	MANUFACT.	MODEL	TEMP. SETPOINT	AREA SERVED	STORAGE (GAL)	DCW INLET	GAS INLET	GAS INPUT BTU/H	RECOV. AT 100°F RISE (GAL/HR)	EF	NOTES
WH-2	RHEEM	GPDV75-75	140°F	COMMON AREAS	75	1"	1/2"	75,100	68	0.80	(1) (2) (3) (4) (5)

NOTE:
(1) PROVIDE EXPANSION TANK (AMTROL THERM-X-TROL ST-8 OR EQUVALENT). SEE DETAIL 7 ON SHEET P500
(2) FOR OWNER TO QUALIFY FOR ENERGY STAR CERTIFICATION, THE WATER HEATER MUST HAVE A UEF >= 0.78 OR AN EF >= 0.77
(3) UNIT HAS INTAKE AND EXHAUST DUCTED TO OUTSIDE. EXTERIOR WALL NEXT TO UNIT.
(4) INSTALL UNIT PER MANUFACTURER INSTRUCTIONS.
(5) UNIT INSTALLED AT ELEVATION OF 4,700 FEET ABOVE SEA LEVEL.

DOMESTIC HYDRAULIC CALCULATIONS

	PRESSURE (PSI)
PRESSURE AT MAIN (FIELD VERIFY) [NOTE A]	95.0
PRESSURE DIFFERENTIAL FROM MAIN TO PRV	
BOOSTER PUMP PRESSURE [NEGATIVE PER CALCS]	0.0
PRESSURE LOSS AT TAP	0.5
PRESSURE LOSS OF PIPE (MAIN TO WATER ENTRY)	1.0
TOTAL	1.5
PRESSURE DIFFERENTIAL AT WATER RISER	
METER LOSS (2" METER)	6.0
BACKFLOW PREVENTER [NOTE B]	13.5
TOTAL	19.5
PRESSURE DROP FOR COLD WATER SYSTEM	
ELEVATION LOSS (0.433 PSI/FOOT) (30')	13.0
PRESSURE LOSS OF PIPE (3.5 PSI/100 FEET) (210')	7.4
DESIGN PRESSURE @ FIXTURES [NOTE C]	20.0
TOTAL	40.4
TOTAL PRESSURE DROP DUE TO BUILDING SYSTEM	59.9
ANTICIPATED FULL FLOW PRV EQUIPMENT PRESSURE DROP	10.0
TOTAL PRESSURE REQUIRED	69.9
PRV DIFFERENTIAL (REDUCING PRESSURE AT DEVICE)	**33.6**

GENERAL NOTES:
1) NOTE: "TOTAL PRESSURE REQUIRED" IS THE REQUIRED MINIMUM PRESSURE AT THE ENTRY TO THE BUILDING
2) DESIGN LOAD. NEW WORK 295 FIXTURE UNIT LOAD. THIS EQUALS 85 GPM (PER IPC TABLE E103.3(3))
3) BUILDING TAP SIZE AND PIPE SIZE TO METER: 2"
4) IRRIGATION WAS NOT CONCERNED IN CALCULATION. IRRIGATION IS REQUIRED TO BE USED IN NON-OCCUPIED HOURS.
5) PRESSURE DROP FOR HOT WATER SYSTEM WAS REMOVED FROM CONSIDERATION. EACH APARTMENT HAS ITS OWN HOT WATER HEATER.

KEYED NOTES:
A) PRESSURE AT STREET WAS DETERMINED FROM CVIL ENGINEER OR OWNER. IT IS NOT WITHIN THE SCOPE OF THE PLUMBING ENGINEER TO DETERMINE THE PRESSURE AT THE MAIN.
B) PRESSURE DROP DETERMINED FROM MANUFACTURE LISTING.
C) PRESSURE AT FIXTURE IS DEFINED BY MINIMUM PRESSURE REQUIRED AT SHOWER FIXTURE, AS DEFINED BY IPC TABLE 604.3 MINIMUM OPERATING PRESSURE (FOR SHOWERS AND BATHS)

HGF ARCHITECTS INC.

COLORADO REGISTERED 32686 PROFESSIONAL ENGINEER
04/27/2020

PLANT ENGINEERING CONSULTANTS
320 W FILLMORE SUITE 100 COLORADO SPRINGS CO 80907
719 473 7077
www.plantecl.com

PROJECT NUMBER: 19161
PHASE: PERMIT SET
PHASE ISSUE DATE: 04/27/2020
DESIGNED BY: RL/AO/MF
SCALE:

PLUMBING SCHEDULES

SHEET ISSUE DATE: 04/27/2020

P610

A SUPPORTIVE HOUSING FACILITY
THE RIGHT PLACE
CARDINAL CAPITAL MGMT.

4/27/2020 4:39:04 PM james hollock
G:\projects\19\19161 the right place\drawing files\plumbing\19161_p610.dwg

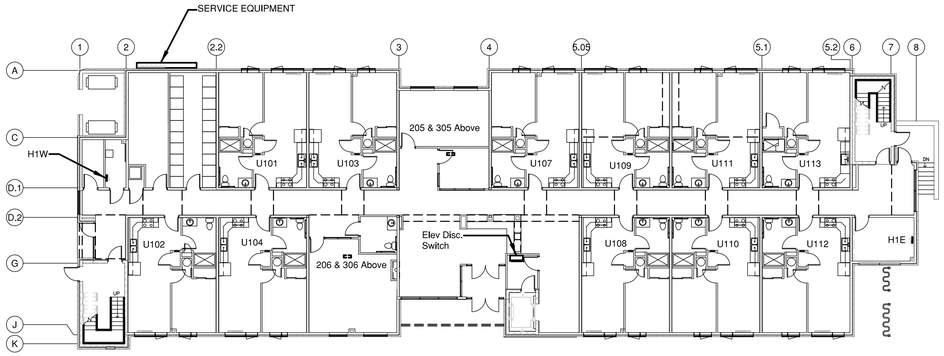

FIRST FLOOR - OVERALL PLAN

SCALE: 1/16" = 1'- 0"

0 8' 16' 32'

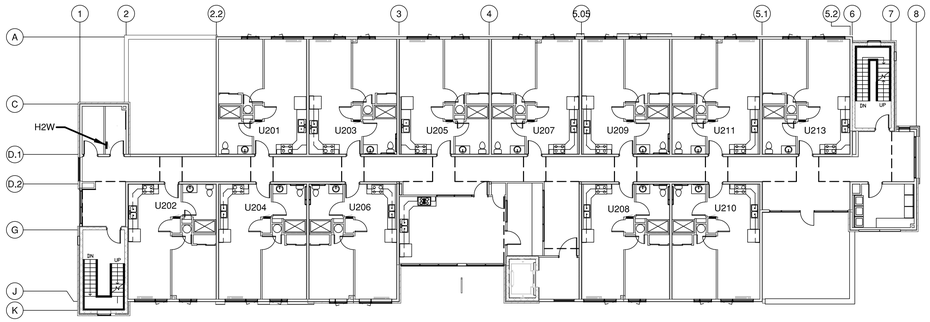

SECOND FLOOR - OVERALL PLAN

SCALE: 1/16" = 1'- 0"

0 8' 16' 32'

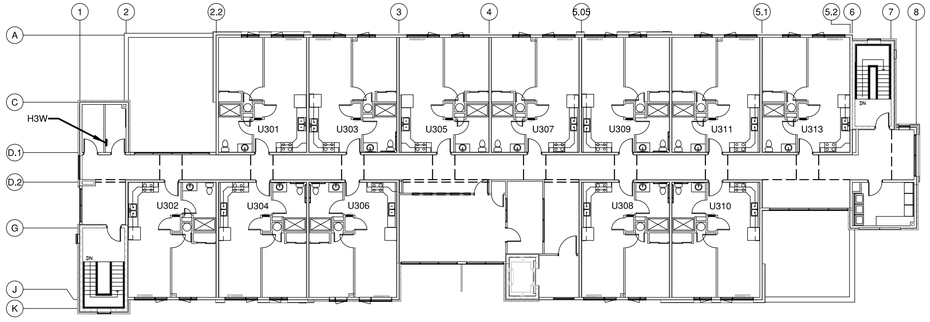

THIRD FLOOR - OVERALL PLAN

SCALE: 1/16" = 1'- 0"

0 8' 16' 32'

PROJECT GENERAL NOTES:

1. ONLY APPROVED PRODUCTS LISTED ON DRAWINGS OR IN AN ADDENDUM WILL BE ACCEPTED.
2. THE ENTIRE ELECTRICAL INSTALLATION SHALL CONFORM TO THE 2017 NEC.
3. THIS PROJECT SHALL MEET THE 2015 ENTERPRISE GREEN COMMUNITIES CRITERIA.
4. CONTRACTOR TO REFER TO CODE STUDY FOR RATINGS OF WALLS, FLOORS AND CEILINGS. ADJUST INSTALLATION AS REQUIRED TO MAINTAIN RATING OR UTILIZE UL LISTED METHODS TO MAINTAIN THE FIRE RATING.

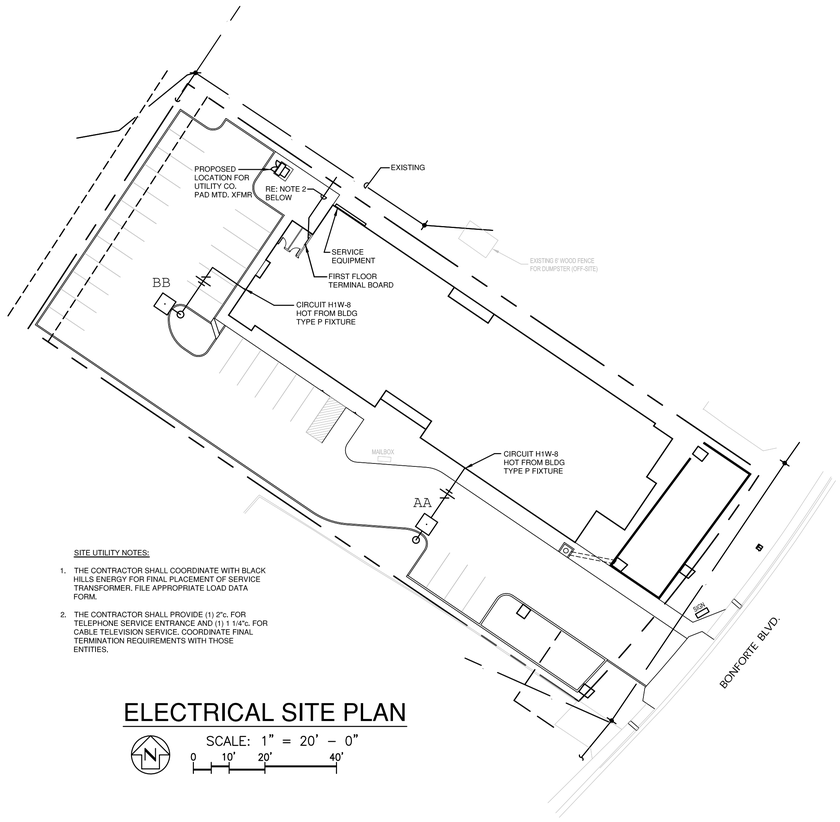

ELECTRICAL SITE PLAN

SCALE: 1" = 20' - 0"

0 10' 20' 40'

SITE UTILITY NOTES:

1. THE CONTRACTOR SHALL COORDINATE WITH BLACK HILLS ENERGY FOR FINAL PLACEMENT OF SERVICE TRANSFORMER. FILE APPROPRIATE LOAD DATA FORM.
2. THE CONTRACTOR SHALL PROVIDE (1) 2"c. FOR TELEPHONE SERVICE ENTRANCE AND (1) 1 1/4"c. FOR CABLE TELEVISION SERVICE. COORDINATE FINAL TERMINATION REQUIREMENTS WITH THOSE ENTITIES.

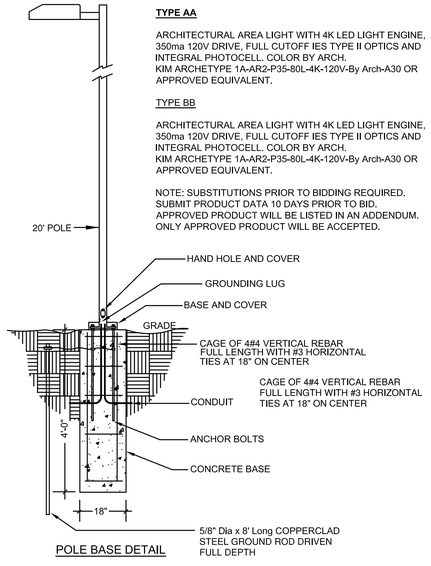

POLE BASE DETAIL

TYPE AA

ARCHITECTURAL AREA LIGHT WITH 4K LED LIGHT ENGINE, 350ma 120V DRIVE, FULL CUTOFF IES TYPE II OPTICS AND INTEGRAL PHOTOCELL. COLOR BY ARCH. KIM ARCHETYPE 1A-AR2-P35-80L-4K-120V-By Arch-A30 OR APPROVED EQUIVALENT.

TYPE BB

ARCHITECTURAL AREA LIGHT WITH 4K LED LIGHT ENGINE, 350ma 120V DRIVE, FULL CUTOFF IES TYPE II OPTICS AND INTEGRAL PHOTOCELL. COLOR BY ARCH. KIM ARCHETYPE 1A-AR2-P35-80L-4K-120V-By Arch-A30 OR APPROVED EQUIVALENT.

NOTE: SUBSTITUTIONS PRIOR TO BIDDING REQUIRED. SUBMIT PRODUCT DATA 10 DAYS PRIOR TO BID. APPROVED PRODUCT WILL BE LISTED IN AN ADDENDUM. ONLY APPROVED PRODUCT WILL BE ACCEPTED.

INDEX TO ELECTRICAL DRAWINGS

E0.1 ELECTRICAL SITE PLAN AND OVERALL PLANS

E0.2 LIGHTING FIXTURE SCHEDULE, SYMBOL LEGENDS AND LIGHTING CONTROL DIAGRAMS

E0.3 AREA OF RESCUE DETAIL AND ENTRY SYSTEM DETAILS

E0.4 INFORMATION TECHNOLOGY SCHEDULES/DETAILS AND TELEPHONE TERMINAL BOARD RISER DIAGRAM

E1.1 FIRST FLOOR LIGHTING AND POWER PLANS

E1.2 SECOND FLOOR LIGHTINS AND POWER PLANS

E1.3 THIRD FLOOR LIGHTING AND POWER PLANS

E2.1 LOW VOLTAGE SYSTEMS PLANS

E3.1 1/4 SCALE UNIT ELECTRICAL PLANS AND UNIT FIXTURE SCHEDULE

E3.2 FIRST FLOOR 1/4 SCALE PLANS, IT ROOM, CENTRAL AREA AND EAST MECHANICAL ROOM

E3.3 SECOND AND THIRD FLOOR 1/4 SCALE PLANS, CENTRAL AREAS AND LAUNDRY ROOMS

E4.1 SINGLE LINE DIAGRAM AND SERVICE CALCS

E4.2 FIRST FLOOR APARTMENT FEEDER LAYOUT, PANEL ARRANGEMENT AND PANEL SCHEDULES

E4.3 UNIT FEEDER INSTALLATION DETAILS

HGF ARCHITECTS INC.

COLORADO REGISTERED PROFESSIONAL ENGINEER LANCE M. KOHNERT 33305 04/27/20

KOHNERT ELECTRICAL ENGINEER'S, INC.

911 South 8th Steet
Colorado Springs Co 80905
Phone (719) 633-2637
Fax: (719) 633-3465
email@kohnertee.com

PROJECT NUMBER:	2019.042
PHASE:	Permit Set
PHASE ISSUE DATE:	
DESIGNED BY:	LMAK
SCALE:	Per Plans

OVERALL PLANS AND ELECTRICAL SITE PLAN

SHEET ISSUE DATE: 04/27/20

E0.1

THE RIGHT PLACE
CARDINAL CAPITAL MGMT.
A SUPPORTIVE HOUSING FACILITY

Z:\2019\2019.042\ 2019.042 Elec CD Final 04-27-20 Stamped.dwg Apr 27, 2020 - 9:30am

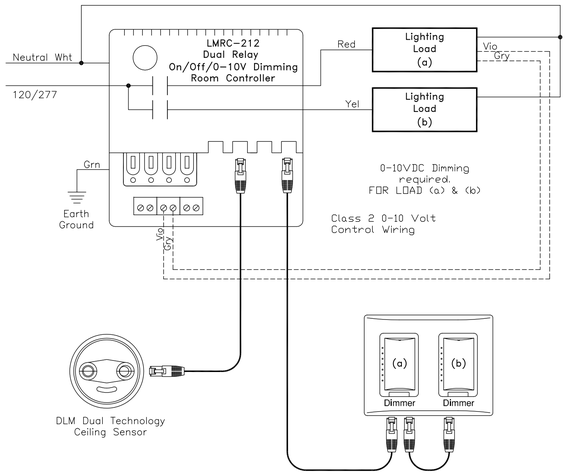

(E) First Floor Commons Lighting Controls

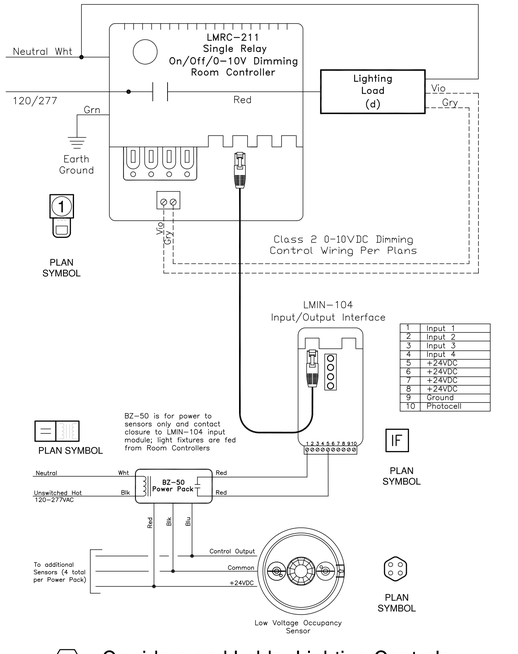

(F) Corridors and Lobby Lighting Controls

EQUIPMENT NOTES FOR CORRIDORS AND LOBBY AREA

FIRST FLOOR COORIDOR AND LOBBY AREA:

1. REQUIRES (3) SINGLE RELAY UNITS WITH BZ-50 POWER PACK AND INPUT/OUTPUT INTERFACE DEVICE.
2. WEST CORRIDOR REQUIRES (2) OCCUPANCY SENSORS, LOBBY REQUIRES (3) OCCUPANCY SENSORS AND EAST CORRIDOR REQUIRES (2) OCCUPANCY SENSORS.

SECOND FLOOR CORRIDOR

1. REQUIRES (1) SINGLE RELAY UNIT WITH BZ 50 POWER PACK, (1) INPUT OUTPUT INTERFACE DEVICE AND (4) OCCUPANCY SENSORS.

THIRD FLOOR CORRIDOR

1. REQUIREMENTS ARE SAME AS SECOND FLOOR.

DIGITAL LIGHTING SYSTEM GENERAL NOTES:

1. ALL CABLES TO BE ROUTED IN CONDUIT IN NON-ACCESSIBLE WALL AND CEILING SPACES.
2. ALL CABLES TO BE PLENUM RATED.
3. PROVIDE FINAL SHOP DRAWINGS FROM MANUFACTURER FOR APPROVAL PRIOR TO INSTALLATION.

LIGHTING FIXTURE SYMBOL LEGEND

SYMBOL	DESCRIPTION
D a 2	LED FIXTURE. UPPER CASE LETTER INDICATES TYPE, LOWER CASE LETTER INDICATES CONTROLLING SWITCH AND NUMBER IS CIRCUIT NUMBER.
NL	LIGHT FIXTURE WIRED HOT AS NIGHT LIGHT. RE: FIXTURE SCHEDULE FOR FIXTURES THAT REQUIRE AN EMERGENCY BATTERY TYPE BALLAST/DRIVER.
EXIT	CEILING MOUNTED SELF CONTAINED - EXIT SIGN. RE: FIXTURE SCHEDULE FOR ADDITIONAL INFORMATION. WIRE AHEAD OF LOCAL SWITCH OR TO HOT CIRCUIT INDICATED.

LIGHTING CONTROL LEGEND

$	20A-1P WALL SWITCH INSTALLED AT +45" ABOVE FINISHED FLOOR.
$3way	20A 3 WAY SWITCH INSTALLED AT +45" ABOVE FINISHED FLOOR.
OS	LINE VOLTAGE (DUAL TECHNOLOGY- 360 DEG) OCCUPANCY SENSOR SWITCH WITH 5 TO 30 MINUTE TIME DELAY (SET AT 15 MINUTES). INSTALL FLUSH IN CEILING & WIRE AHEAD OF FIXTURE CONTROLLING DEVICE. WATTSTOPPER #DT-355 OR APPROVED EQUIV.
	WALL MOUNTED 120V DUAL TECHNOLOGY MOTION SENSOR/ SWITCH WITH MANUAL ON-OFF OPERATION AND ADJUSTABLE TIME DELAY. FLUSH MOUNTED AT + 45" A.F.F. WATTSTOPPER #DW-301 OR APPROVED EQUIVALENT. DEVICE REQUIRES A HOT AND NEUTRAL.
	WALL MOUNTED 120V PROGRAMABLE DUAL TECHNOLOGY OCCUPANCY SENSOR SWITCH WITH 0-10V DIMMING FOR LED - WATTSTOPPER DW-311 OR APPROVED EQUIVALENT. SET TIME DELAY TO 30 MINUTES.
	WALL MOUNTED 120V 0-10V DIMMER WITH INTEGRATED POWER PACK FOR ON-OFF FUNCTION. WATTSTOPPER CD4FBL* OR APPROVED EQUIVALENT.
	CEILING MOUNTED LOW VOLTAGE ULTRASONIC CEILING SENSOR. WATTSTOPPER #UT-355 SERIES OR APPROVED EQUIVALENT.
	POWER PACK FOR LOW VOLTAGE SENSORS. WATTSTOPPER #BZ-50 OR APPROVED EQUIVALENT.
	EXTERIOR 120V MOTION SENSOR. WATTSTOPPER #EW-200 OR APPROVED EQUIVALENT.

DIGITAL LIGHTING CONTROL LEGEND

SYMBOL	DESCRIPTION
	DIGITAL PLENUM CONTROLLER WITH 0-10V DIMMING OR FORWARD PHASE DIMMING, LED STATUS INDICATOR, PRESETS AND "PLUG 'n' GO AUTOMATIC CONFIGURATION. WATTSTOPPER #DLM SYSTEM OR APPROVED EQUIVALENT. REFER TO CONTROL DIAGRAM FOR EXACT TYPE.
	DIGITAL SINGLE BUTTON WALL SWITCH FOR ON/OFF OPERATION WITH LED STATUS, IR TRANSCEIVER AND "PLUG 'n' GO AUTOMATIC CONFIGURATION. WATTSTOPPER #LMSW-101-X OR APPROVED EQUIVALENT.
	DIGITAL SINGLE BUTTON WALL 0-10V DIMMER FOR ON/OFF OPERATION WITH LED STATUS, IR TRANSCEIVER AND "PLUG 'n' GO AUTOMATIC CONFIGURATION. WATTSTOPPER #LMDM-101-X OR APPROVED EQUIVALENT.
	DIGITAL DUAL TECHNOLOGY CEILING MOUNTED OCCUPANCY SENSOR WITH LCD DISPLAY, IR TRANSCEIVER AND "PLUG 'n' GO AUTOMATIC CONFIGURATION. WATTSTOPPER #LMDC-100 OR APPROVED EQUIVALENT.

POWER SYMBOL LEGEND

	20A, DUPLEX RECEPTACLE NEMA TYPE 5-20R. MOUNT AT +18" UNLESS NOTED OTHERWISE.
	20A, DOUBLE DUPLEX RECEPTACLE MOUNTED UNDER ONE FACEPLATE. MOUNT AT +18" UNLESS NOTED OTHERWISE.
	20A, HEAVY DUTY DUPLEX RECEPTACLE USED IN CORRIDOR. MOUNT AT +18" UNLESS NOTED OTHERWISE.
	20A, TAMPER RESISTANT DUPLEX RECEPTACLE WITH ONE-HALF SWITCHED FOR DISPOSER & DISHWASHER. MOUNT BELOW COUNTER.
	20A, TAMPER RESISTANT DUPLEX RECEPTACLE WIRED TO A DEDICATED 20A CIRCUIT. MOUNT AT +18" A.F.F UNLESS NOTED OTHERWISE.
GFI	15A, TAMPER RESISTANT GROUND FAULT CIRCUIT INTERRUPT TYPE DUPLEX RECEPTACLE. MOUNT AT +45" A.F.F. UNLESS INDICATED OTHERWISE ON DRAWINGS.
	15A, TAMPER RESISTANT AFCI BREAKER PROTECTED (GENERAL USE) DUPLEX RECEPTACLE. MOUNTED AT +18".
	20A, FLOORBOX WITH RECEPTACLES ONLY. LEGRAND #RFB4-OG WITH COVER OR APPROVED EQUIVALENT..
	20A-208V RECEPTACLE FOR PTAC UNIT. CONFIRM EXACT OUTLET CONFIGURATION WITH EQUIPMENT SUPPLIER.
	30A-120/250V OUTLET FOR DRYER. GROUND PER NEC.
	50A-120/250V OUTLET FOR RANGE. GROUND PER NEC. MOUNTING HEIGHT TO BE COORDINATED WITH EQUIPMENT INSTALLED.
J	JUNCTION BOX
	CONNECTION FOR EXHAUST FAN. PROVIDE SNAP SWITCH NO THERMAL OVERLOAD MOUNT @ MTR.
	PUSHBUTTON AND MOTOR FOR HANDICAP/SCREEN OPERATORS.
	HEAVY DUTY MOTOR RATED DISCONNECT SWITCH. PROVIDE NEMA 3R FOR EXTERIOR APPLICATIONS
	ELECTRICAL WALL MOUNTED HEATER. COORDINATE FINAL CONNECTION REQUIREMENT WITH MECHANICAL.
	CONNECTION FOR ELECTRICAL WATER HEATER - RE: MECHANICAL.
	SURFACE MOUNTED BRANCH CIRCUIT PANEL.
	FLUSH MOUNTED BRANCH CIRCUIT PANEL.
	CONTROL PANEL.
	BRANCH CIRCUIT CONDUIT RUN CONCEALED. PROVIDE (GREEN) EQUIPMENT GROUND IN ALL RUNS.
A	SYMBOL ATTRIBUTES - 'A' = MOUNTED ABOVE COUNTER BACKSPLASH,

FIXTURE SCHEDULE – THE RIGHT PLACE

TYPE	PICTORAL	DESCRIPTION & MANUFACTURES CATALOGUE NUMBERS ALL BALLASTS ARE 120V UNLESS LISTED OTHERWISE	NOTES	FINISH	LOCATION	LAMP(S) NO.	LAMP(S) TYPE
A		2' x 2' RECESSED EDGE-LIT LED FLAT PANEL WITH ELECTRONIC 0-10V DIM. DRIVER. CEILING: LAY-IN ACOUSTICAL GRID COLUMBIA #SRP22-30-MW-G-ED-U OR APPROVED EQUIV.	1	WHITE	CORRIDOR	-	18W/ 2071LUM/ 830
B		2' x 2' RECESSED EDGE-LIT LED FLAT PANEL WITH ELECTRONIC 0-10V DIM. DRIVER. CEILING: LAY-IN ACOUSTICAL GRID COLUMBIA #SPR22-30-VL-G-ED-U OR APPROVED EQUIV.	1	WHITE	OFFICE	-	41W/ 4218LUM/ 830
C	2'-0"	2' LED SLIM LENSED STRIP LIGHT WITH 120V ELECTRONIC DIMMING DRIVER. COLUMBIA #LCL-2-30-ML-ED-U OR APPROVED EQUIVALENT.	1	B.W.E.	VARIOUS	-	24W/ 2800LUM/ 830
D	4'-0"	4' LED SLIM LENSED STRIP LIGHT WITH 120V ELECTRONIC DIMMING DRIVER. COLUMBIA #LCL-4-30-ML-ED-U OR APPROVED EQUIVALENT.	1	B.W.E.	VARIOUS	-	42W/ 5330LUM/ 830
E		4' LENSED LED WRAP AROUND WITH 120V ELECTRONIC DRIVER. COLUMBIA #LPT-4-30-ML-E-U OR APPROVED EQUIVALENT.	1	B.W.E.	VARIOUS	-	53W 5000LUM/ 830
F		6" ROUND LED DOWN LIGHT WITH 0-10 V DIMMING. AND TRIM COLOR BY ARCHITECT. PRESCOLITE #LTR-6RD-H-SL-06L-DM1-LTR-6RD-T-HL-30K-8-WD-VS OR APPROVED EQUIVALENT. Fe SAME AS F WITH EM DRIVER.	1 & 4	CLEAR	CORRIDOR	1	8W/ 600LUM/ 830
G		6" ROUND LED DOWN LIGHT WITH 0-10 V DIMMING. AND TRIM COLOR BY ARCHITECT. PRESCOLITE #LTR-6RD-H-SL-15L-DM1-LTR-6RD-T-HL-30K-8-WD-VS OR APPROVED EQUIVALENT.	1 & 4	CLEAR	COMMONS	1	19W/ 1500LUM/ 830
H		DECORATIVE 31" W x 31"L x 6" H SURFACE MNT LED FIXTURE WITH BLACK FINISH. ET2 LIGHTING #E21518-BK OR APPROVED EQUIVALENT.	1	BY ARCH	VARIOUS	-	112W/ 5,500LUM/ 830
J		DECORATIVE ADA COMPLIANT LED WALL SCONCE WITH FINISH BY ARCHITECT. TERON #CVA-DBL-L11.3-LT350-120-XX-30K OR APPROVED EQUIVALENT.	1	BY ARCH	VARIOUS	-	12W/ 1740LUM/ 830
K		24" DECORATIVE LED OVER MIRROR LIGHT WITH WHITE ACRYLIC DIFFUSER AND ELECTRONIC DRIVER. TERON #KA24-L19.0-LT500-120-BN-XXK OR APPROVED EQUIVALENT.	1	BRUSHED NICKEL	RESTROOMS	-	17W/ 1540LUM/ 830
L		4' X 4" LED WALL MOUNTED INDIRECT/DIRECT FIXTURE WITH FORMED COLD ROLLED STEEL HOUSING AND PAINTED WHITE STEEL REFLECTOR. OCCUPANCY SENSOR TO OPERATE DOWN LIGHT. FINELITE #HP-4 WM-ID-4'-S-H-830-TG-F-96LG-120-DC-FC-10%-MB-FE-SE-FAC CHO-DBO OR APPROVED EQUIVALENT.	1	WHITE	VARIOUS	-	43W 4594LUM/ 430
M		SMALL EXTERIOR DARK SKY WALL MOUNTED FIXTURE WITH DIE CAST ALUMINUM HOUSING. TERON TTM-L12.5-LT350-120-277V-XX-40K-PCL120 OR APPROVED EQUIVALENT	1	BY ARCH	EXTERIOR	-	11W 1600LUM/ 840
N		SMALL RECTANGULAR LED STEP LIGHT WITH DIE-CAST ALUMINUM HOUSING. KIM LIGHTING #EL807-9L-4K-UV-XX OR APPROVED EQUIVALENT	1	BY ARCH	EXTERIOR	-	11W 145LUM/ 840
P		TEMPERED IMPACT RESISTANT FLAT GLASS LENS AND DIE CAST ALUMINUM HOUSING. HUBBELL #TRP1-12L-15-4K7-2-UNV-XX OR APPROVED EQUIVALENT Pe SAME AS P WITH EM DRIVER.	1	BY ARCH	EXTERIOR	-	13W 1577LUM/ 840
		SELF-CONTAINED EMERGENCY LIGHT WITH INJECTION MOLDED HOUSING, 2 HEADS, SELF-DIAGNOSTIC FEATURE AND HIGH ABUSE HOUSING (120V)	2	WHITE	VARIOUS	2	BY MFGR
EXIT EXIT	EXIT	SELF-CONTAINED GREEN LED EXIT SIGN WITH HIGH IMPACT RESISTANT THERMO-PLASTIC (WHITE) HOUSING AND SELF DIAGNOSTIC FEATURE. (120V)	2 & 3	WHITE BODY	VARIOUS	1	PER MFGR

NOTES:

1. SUBMIT REQUEST FOR SUBSTITUTION FIXTURE 7 WORKING DAYS PRIOR TO BID. APPROVED FIXTURES WILL BE LISTED IN AN ADDENDUM.
2. SUBSTITUTIONS ARE NOT REQUIRED HOWEVER ONLY SPECIFICATION GRADE WILL BE ACCEPTED.
3. CONTRACTOR IS RESPONSIBLE TO COORDINATE EXIT SIGN FACES AND ARROWS WITH LOCATIONS IN WHICH EQUIPMENT IS INSTALLED.
4. PROVIDE (1) DUALITE #LG250 RECESSED MOUNTED INVERTER **PER** FLOOR. (1ST FLOOR - 150W) (2ND FLOOR - 90W) (3RD FLOOR - 90W)

HGF ARCHITECTS INC.

COLORADO REGISTERED 33305 PROFESSIONAL ENGINEER

KOHNERT ELECTRICAL ENGINEER's, INC.
911 South 8th Steet
Colorado Springs Co 80905
Phone (719) 633-2637
Fax: (719) 633-3465
email@kohnertee.com

PROJECT NUMBER: 2019.042
PHASE: Permit Set
PHASE ISSUE DATE:
DESIGNED BY: LMAK
SCALE: N/A

LIGHTING FIXTURE SCHEDULE SYMBOL LEGENDS AND LIGHTING CONTROL DIAGRAMS

SHEET ISSUE DATE: 04/27/20

E0.2

THE RIGHT PLACE FOR CARDINAL CAPITAL MGMT. A SUPPORTIVE HOUSING FACILITY

Z:\2019\2019.042\ 2019.042 Elec CD Final 04-27-20 Stamped.dwg Apr 27, 2020 - 9:28am

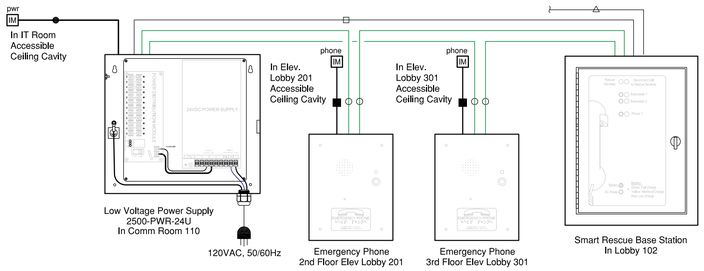

AREA OF RESCUE & ELEVATOR LANDING COMMUNICATIONS SYSTEM

EQUIPMENT MOUNTING HEIGHTS

Call Box: 48" Above Finished Floor to Push Button

Base Station: 60" A.F.F. to Center of Cabinet

SIGNAGE:
Instructional - Adjacent or Above Call Box Tactile - 48" to 60" A.F.F. to Lowest Tactile Character Illuminated - Above 60" But Below 80" to Sign Top.

GENERAL NOTES:

1. Provide a Complete and Operational System - System to comply with IBC Section 1009.
2. Provide Equipment as Manufactured By Rath Communications. Substitutions Prior to Bid Required to The Engineer (14) Days Prior to Bid. Approved Substitutions Will Be Listed in an Addendum. Only Approved Product Will Be Allowed on Project.
3. Provide Signage - Illuminated, Tactile and Instructional

CABLE LEGEND

- POWER CABLE: 18/2 AWG, 1/2"c.
- COMM. CABLE: 2 Pair 22 or 24 gauge, Twisted, Shielded.
- POWER FAILURE: 18/2 AWG, 1/2"c. Thru Fire Alarm Monitor Module in Accessible Ceilling Cavity.
- COMM. FAILURE: 18/2 AWB - Thru Fire Alarm Monitor Module in Accessible Ceiling Cavity.
- ANALOG PHONE LINE 2-Pair 22 Guage To 110 Punchdown Block in Comm Room

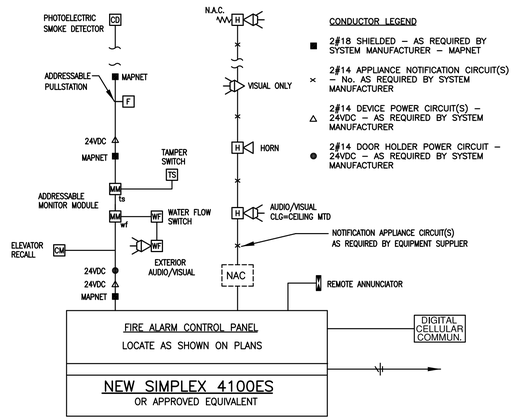

GENERAL NOTES

SIGNALING LINE CIRCUIT (MAPNET/IDNET) MAY BE "T-TAPPED" AS NECESSARY.

DIAGRAM IS CONCEPTUAL AND DOES NOT INDICATE ALL DEVICES.

Fire Alarm Riser Diagram

FIRE ALARM DEVICES AND DIAGRAM FOR COMMON AREAS.

Unit Fire Alarm Devices

CO alarm — 120V HARD WIRED COMBINATION RESIDENTIAL SMOKE DETECTOR/CARBON MONOXIDE DETECTOR WITH 9V BATTERY BACKUP AND SOUNDER BASE. UNITS TO BE TANDEM WIRED WITHIN APT. UNIT TO SOUND ALARM'S SIMULTANEOUSLY.

CO alarm — 120V HARD WIRED COMBINATION RESIDENTIAL SMOKE DETECTOR/STROBE/CARBON MONOXIDE DETECTOR WITH 9V BATTERY BACKUP AND SOUNDER BASE. UNITS TO BE TANDEM WIRED WITHIN APT. UNIT TO SOUND ALARM'S SIMULTANEOUSLY.

ENTRY AUDIO ONLY SYSTEM LEGEND

SYMBOL	DESCRIPTION
M+	MULTI TENANT 10-KEY ENTRANCE STATION (AUDIO ONLY) WITH NETWORK CAPABILITY. AIPHONE #GTA-DES OR APPROVED EQUIVALENT.
C+ HS	GUARD STATION WITH AUDIO AND FRONT DOOR OPENER. AIPHONE #GT-MKB-N OR APPROVED EQUIVALENT.
C+	RESIDENTIAL TENANT STATION (AUDIO ONLY) AIPHONE #GT-1A OR APPROVED EQUIVALENT.
	RESIDENTIAL WIRED DOOR BELL. CRAFTMADE #BR2 STEPPED RECTANGULAR LIGHTED PUSH BUTTON OR EQUIVALENT.

APARTMENT ENTRY SYSTEM INSTALLATION NOTES:

1. LOCATE BUS CONTROL/POWER SUPPLY/AND DISTRIBUTION POINT IN COMM 110.
2. MANUFACTURER TO SUBMIT FINAL WIRING DIAGRAM FOR INSTALLATION.
3. INTERCOM IN APARTMENT UNIT SHALL NOT RELEASE ENTRY DOOR 102. PROVIDE WIRING TO EACH TENANT STATION PER MANUFACTURER'S INSTRUCTION.
4. ALL WIRING TO BE 2 CONDUCTOR, SOLID, NON-SHIELDED, PE Ins., 20AWG.
5. RE: SHEET E0.4 (TERMINAL BOARD RISER DETAIL) FOR REQUIRED EQUIPMENT THAT IS TO BE INSTALLED ON EACH FLOORS TERMINAL BOARD.

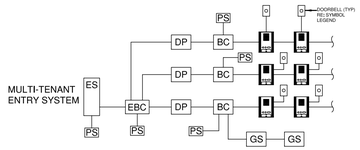

ENTRY SYSTEM WIRING DIAGRAM

ENTRY SYSTEM COMPONENTS (FINAL LAYOUT BY SYSTEM SUPPLIER)

- ES — MULTI-TENANT ENTRY SYSTEM. AIPHONE #GTA-DESB
- GS — GUARD/TELEPHONE STATION. AIPHONE #GT-MKB-N
- EBC — EXPANDED BUS CONTROL UNIT. AIPHONE #GT-BCXB-N
- BC — AUDIO BUS CONTROLLER. AIPHONE# GT-BC
- DP — DISTRIBUTION POINT WIRING TERMINAL STRIP. AIPHONE #GTW-DP
- AUDIO OPEN VOICE TENANT STATION. AIPHONE #GT-1A
- PS — 24V DC POWER SUPPLY, 2A, UL LISTED. AIPHONE #PS-2420UL

DIN RAIL MOUNTING BRACKET. MOUNT IN COMM CLOSET. AIPHONE # W-DIN11 (NOT SHOWN IN DIAGRAM - PROVIDE 1 PER FLOOR)

SECURITY LEGEND

SYMBOL	DOOR HARDWARE DEVICE DESCRIPTION
CR	ELECTRONIC CARD READER AND/OR KEYPAD TO OPERATE 1 DOOR.
	SECURITY CAMERA HARDWARE DEVICE DESCRIPTION
©	CEILING MOUNTED SECURITY CAMERA FURNISHED AND INSTALLED UNDER SEPERATE CONTRACT.
©	WALL MOUNTED SECURITY CAMERA FURNISHED AND INSTALLED UNDER SEPERATE CONTRACT.

SECURITY SYSTEM GENERAL INSTALLATION NOTES:

1. DOOR HARDWARE ROUGH-IN:
   a. PROVIDE BACK BOXES AS REQUIRED BY SYSTEM SUPPLIER AND 3/4"c., WITH INSULATED BUSHING ON STUB END, INTO ACCESSIBLE CEILING CAVITY.
   b. ROUGH-IN OF DOOR CONTROL DEVICES ARE CONCEPTUAL. FINAL DESIGN BY OWNER'S SECURITY CONTRACTOR. CONFIRM ALL REQUIREMENTS PRIOR TO ROUGH-IN.
2. DOOR SYSTEM HARDWARE:
   a. SYSTEM DEVICES, CABLING, TERMINATIONS AND TESTING ARE BY SECURITY SYSTEM CONTRACTOR.
3. SECURITY CAMERA ROUGH-IN:
   a. FOR CEILING MOUNTED CAMERAS ROUGH-IN A 4S BOX WITH SINGLE GANG RING (STYLE OF RING BY SYSTEM SUPPLIER. PROVIDE AN INSULATED BUSHING IN TOP ENTRY TO BOX.
   b. FOR WALL MOUNTED CAMERAS PROVIDE A 4S BOX WITH SINGLE GANG RING (STYLE OF RING BY SYSTEM SUPPLIER. PROVIDE A 3/4"c. WITH INSULATED BUSHING IN AN ACCESSIBLE CEILING CAVITY.
4. SECURITY SYSTEM HARDWARE:
   a. SYSTEM HARDWARE (CAMERAS, RECORDING EQUIPMENT, ETC. IS TO BE FURNISHED AND INSTALLED BY THE SECURITY SYSTEM CONTRACTOR.
   b. THE ELECTRICAL CONTRACTOR SHALL PROVIDE A Cat 6 (Yellow Jack) CABLE TERMINATED, AT BOTH ENDS, WITH A MALE PLUG, TEST ALL CABLE. COIL 6" OF TERMINATED CABLE AT SECURITY CAMERA LOCATION AND TERMINATE AT LOW VOLTAGE SYSTEM RACK IDENTIFIED WITH THE SPACE FOR THE SECURITY SYSTEM RECORDING EQUIPMENT.

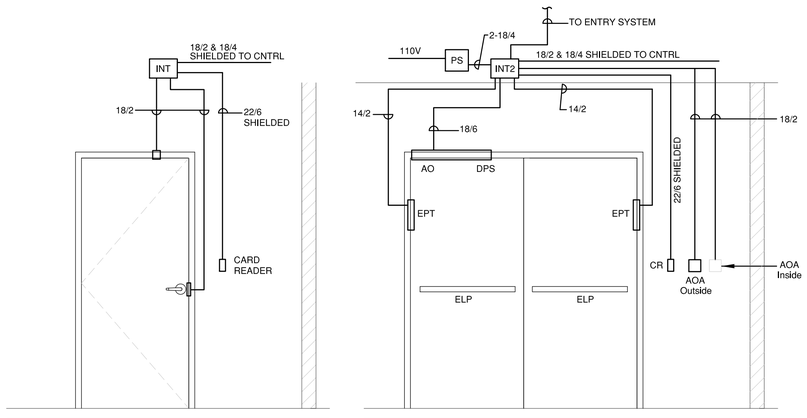

ABBREVIATION	DESCRIPTION	WIRE REQUIREMENTS	MOUNTING INSTRUCTIONS
CR	CARD READER	22/6 SHIELDED TO INTERFACE	MOUNTS TO SINGLE GANG BOX
INT	SINGLE DOOR INTERFACE	18/4 SHIELDED & 14/2 TO HEAD END	MOUNTS ABOVE CEILING
W	WIRELESS CR CYLINDRICAL LOCKSET	WIRELESS	MOUNTS ON DOOR
INT2	DUAL DOOR INTERFACE	18/4 SHIELDED & 14/2 TO HEAD END	MOUNTS ABOVE CEILING
DPS	DOOR POSITION SWITCH	18/2 TO INTERFACE	MOUNTS ABOVE CEILING
ELP	ELECTRIFIED EXIT DEVICE KIT	14/2 TO INTERFACE	MOUNTS ON DOOR
EPT	POWER TRANSFER		MOUNTS IN FRAME ON HINGE SIDE
AO	PNEUMATIC AUTO EQUIALIZER		MOUNTS TO DOOR FRAME
AOA	ACTUATOR		MOUNTS TO SINGLE GANG BOX
PS	POWER SUPPLY	2-18/4 TO INTERFACE	MOUNTS ABOVE CEILING

HGF ARCHITECTS INC.

KOHNERT ELECTRICAL ENGINEER's, INC.
911 South 8th Steet
Colorado Springs Co 80905
Phone (719) 633-2637
Fax: (719) 633-3465
email@kohnertee.com

PROJECT NUMBER: 2019.042
PHASE: Permit Set
PHASE ISSUE DATE:
DESIGNED BY: LMAK
SCALE: N/A

AREA OF RESCUE DETAIL
ENTRY SYSTEM DETAIL
TELE. TERM. BRD. LAYOUT

SHEET ISSUE DATE: 04/27/20

E0.3

THE RIGHT PLACE — A SUPPORTIVE HOUSING FACILITY
CARDINAL CAPITAL MGMT.

Z:\2019\2019.042\ 2019.042 Elec CD Final 04-27-20 Stamped.dwg Apr 27, 2020 - 9:28am

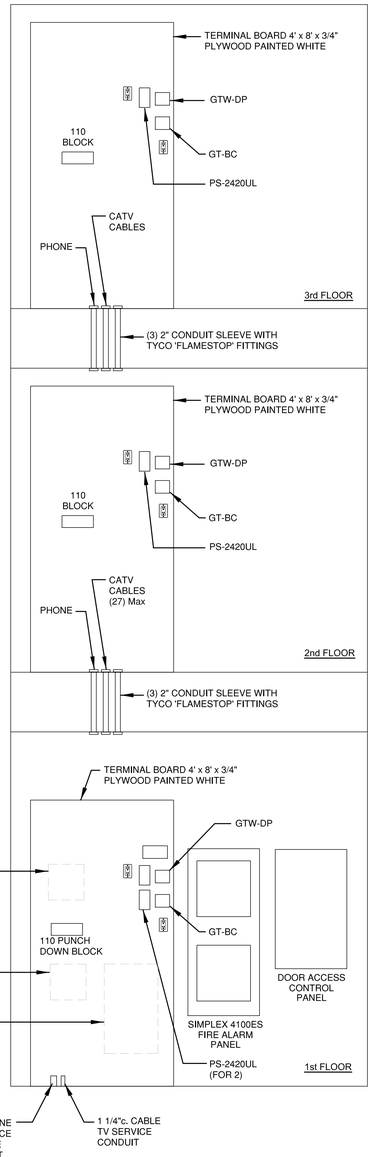

LOW VOLTAGE SYSTEMS TERMINAL BOARD RISER DIAGRAM

GENERAL NOTE:

1. LAYOUTS SHOWN ARE CONCEPTUAL IN NATURE. THE CONTRACTOR IS TO COMFIRM FINAL LAYOUT REQUIRMENTS WITH APPROPRIATE VENDOR(S), PHONE AND CABLE TV SERVICE COMPANIES ETC.
2. ALL CONDUITS FOR LOW VOLTAGE SYSTEMS TO HAVE INSULATED BUSHINGS AND PULLSTRING..
3. IT IS THE CONTRACTORS RESPONSIBILITY TO PROVIDE COMPLETE AND OPERATIONAL SYSTEMS. ALL DEVICES MAY NOT BE INDICATED.
4. INSTALLATION OF SYSTEMS SHALL MEET ALL REQUIREMENTS AND RECOMMENDATIONS OF SYSTEM MANUFACTURER'S.
5. PROVIDE GROUND PER NEC ARTICLE 800.
6. CONFORM TO TIA/EIA 569 STANDARDS.
7. PROVIDE SUBMITTALS FOR APPROVAL FOR EACH SYSTEM.

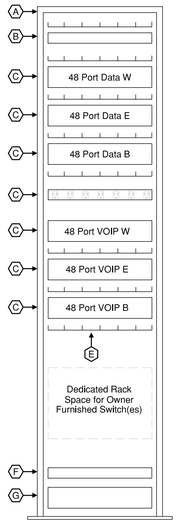

RACK CONFIGURATIONS

BUILDING INTERFACE NOTES:

1. PROVIDE 2"c SLEEVES IN IT ROOM FLOOR INTO BASEMENT. RE: E1.1 FOR LOCATIONS.

GENERAL INSTALLATION NOTES:

1. COORDINATE FINAL TERMINATION EQUIREMENTS WITH THE OWNER's REPRESENTATIVE.
2. RE: SPECIFICATIONS FOR SPECIFIC INSTALLATION REQUIRMENTS.
4. LAYOUT INDICATED IS CONCEPTUAL IN NATURE. THE EXACT LAYOUT TO BE CONFIRMED BY THE OWNER's REPRESENTATIVE.

EQUIPMENT DESCRIPTION WORK NOTES:

- (A) EQUIPMENT RACK
- (B) FIBER PATCH PANEL BY OWNER.
- (C) CAT 6 PATCH PANEL PER SPECIFICATIONS.
- (D) RG6 (16 Port) COAX PATCH PANEL WITH TYPE F CONNECTORS - PER SPECIFICATIONS.
- (E) WIRE MANAGEMENT SYSTEM (TYPICAL).
- (F) RACK MOUNTED UPS - APC #SMX3000RMLV2U
- (G) RACK MOUNTED EXTERNAL BATTERY APC #SMX120RMBP2U.

EQUIPMENT GENERAL NOTE:

1. THE CONTRACTOR IS TO DETERMINE THE FINAL QUANTATIES OF PATCH PANELS REQUIRED. PROVIDE A MINIMUM OF 20% SPARE CAPACITY FOR EACH SERVICE INSTALLED.

IT WORK NOTES

1. CONFIRM ALL LOCATIONS AND HEIGHTS OF DEVICES WITH OWNER PRIOR TO ROUGH-IN.
2.. PROVIDE INSULATED BUSHINGS ON STUB ENDS OF ALL CONDUITS AND PULL STRING.
3. REFER TO DETAIL THIS SHEET FOR OUTLET REQUIREMENTS. ALL CONDUITS ARE TO BE STUBBED 6" ABOVE CEILING INTO ACCESSIBLE CEILING SPACE.
4. PROVIDE J-HOOKS MIN 4' ON CENTER TO SUPPORT CABLING BACK TO PATCH PANELS.
5. ALL CABLING TO BE PLENUM RATED.
6. SYSTEMS ARE TO BE COLOR CODED AS FOLLOWS:

   SECURITY CAMERAS - YELLOW
   TV'S/AV - VIOLET
   VOIP - GREEN
   DATA - BLUE
   ANALOGUE - WHITE

   CABLES TO BE BUNDLED BY SYSTEM. DO NOT COMBINED DIFFERENT SYSTEM INTO (1) BUNDLE

7. PROVIDE A SEPERATE PATCH PANELS FOR:

   a. TV's/AV
   b. VOIP
   c. DATA
   d. COAX

8. EACH PATCH PANEL TO HAVE 20% SPARE CAPACITY CONTRACTOR TO FIELD DETERMINE QUANTITIES AND RACK LAYOUT. PROVIDE ADDITIONAL SYSTEM PATCH PANELS (IF REQUIRED. PROVIDE WIRE MANAGEMENT SYSTEM WITH RACKS.
9. CONTRACTOR TO COORDINATE WITH THE OWNER's REPRESENTATIVE FOR LABEL METHOD AND DESIGNATION.
10. COORDINATE FINAL ROOM LAYOUT OF EQUIPMENT AND PLACEMENT OF CABINETS, RACKS, ETC. WITH THE OWNER's REPRESENTATIVE.

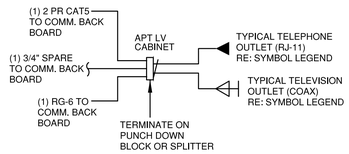

APARTMENT LOW VOLTAGE CABINET (TYPICAL)

APT LV SYSTEM SYMBOL LEGEND

▼	TELEPHONE OUTLET MOUNTED. PROVIDE A SINGLE GANG BACKBOX, RJ-11 JACK AND DEVICE PLATE. TERMINATE IN APARTMENT LOW VOLTAGE CABINET PUNCH DOWN BLOCKS. RE: APARTMENT LOW VOLTAGE CABINET WIRING DIAGRAM.
▽	CABLE TELEVISION OUTLET - PROVIDE SINGLE GANG BACKBOX, COAX F-CONNECTOR AND DEVICE PLATE. TERMINATE IN APARTMENT LOW VOLTAGE CABINET SPLITTER. REI APARTMENT LOW VOLTAGE CABINET WIRING DIAGRAM.

WIRELESS ACCESS POINTS

(W) PROVIDE FOR WAP CONNECTIONS AS INDICATED. CONFIRM FINAL PLACEMENT WITH OWNER DURING CONSTRUCTION. PROVIDE (1) CAT 6 FROM EACH OUTLET TO PATCH PANEL IN COMMUNICATION CLOSET.

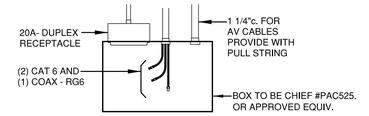

TV/DISPLAY OUTLET DETAIL

COIL A MINIMUM OF 24" OF TERMINATED CABLE IN BACKBOX

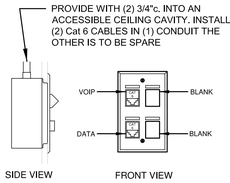

STANDARD VOIP/DATA DETAIL

HGF ARCHITECTS INC.

KOHNERT ELECTRICAL ENGINEER's, INC.
911 South 8th Steet
Colorado Springs Co 80905
Phone (719) 633-2637
Fax: (719) 633-3465
email@kohnertee.com

COLORADO REG. E. 33305 PROFESSIONAL ENGINEER

PROJECT NUMBER:	2019.042
PHASE:	Permit Set
PHASE ISSUE DATE:	
DESIGNED BY:	LMAK
SCALE:	N/A

INFORMATION TECHNOLOGY DETAILS AND LEGENDS

SHEET ISSUE DATE: 04/27/20

E0.4

THE RIGHT PLACE FOR CARDINAL CAPITAL MGMT. A SUPPORTIVE HOUSING FACILITY

Z:\2019\2019.042\ 2019.042 Elec CD Final 04-27-20 Stamped.dwg Apr 27, 2020 - 9:27am

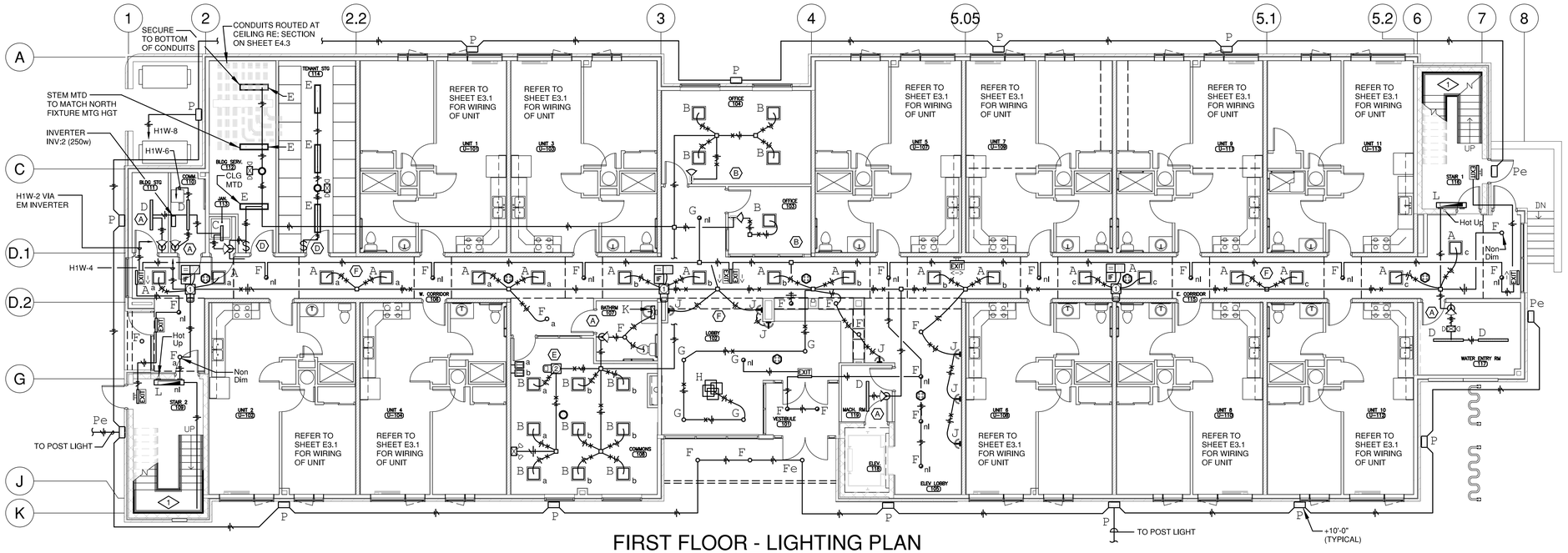

FIRST FLOOR - LIGHTING PLAN

SCALE: 1/8" = 1'-0"

0 4' 8' 16'

POWER WORK NOTES:

1. REFER TO MECHANICAL DRAWINGS FOR EXACT LOCATION(S) OF ALL MECHANICAL EQUIPMENT.
2. ELECTRICAL CONTRACTOR TO CONFIRM ALL MECHANCIAL EQUIPMENT CONNECTIONS PRIOR TO ROUGH-IN.
3. ELECTRICAL CONTRACTOR SHALL REFER TO ARCHITECTURAL CASEWORK DRAWINGS PRIOR TO ROUGH-IN.
4. ALL UNIT KITCHEN RECEPTACLES TO BE TAMPER RESISTANT GFI PROTECTED RECEPTACLES THRU COMBINATION AFCI/GFCI BREAKER IN PANEL. RE: UNIT PANEL SCHEDULE AND 1/4" SCALE DRAWINGS ON SHEET E3.1.

DIAMOND NOTES:

◇1 STAIRWAY FIXTURES TO BE WIRED HOT - FIXTURE INCLUDES INTEGRAL EM BATTERY, UPLIGHT TO BE OPERATING 24/7 AND INTEGRAL OCCUPANCY SENSOR TO OPERARATE DOWN LIGHT COMPONENT.

LIGHTING PLAN - CONTROL EQUIPMENT WORK NOTES:

(A) LIGHT(S) CONTROLLED BY A 1-P WALL MOUNTED (120V.) DUAL TECHNOLOGY OCCUPANCY SENSOR.

(B) LIGHTS CONTROLLED BY A LINE VOLTAGE DUAL TECHNOLGY WALL MOUNTED OCCUPANCY SENSOR SWITCH WITH INTEGRAL 0-10V DIMMING FEATURE.

(C) LIGHTS CONTROLLED BY A CEILING MOUNTED LINE VOLTAGE DUAL TECH. OCCUPANCY SENSOR WHOSE OUTPUT IS CONTROLLED BY A LOCAL WALL MOUNTED 0-10V DIMMING SWITCH WITH INTEGRAL POWER PACK.

(D) LIGHTS CONTROLLED BY A CEILING MOUNTED LINE VOLTAGE DUAL TECH. OCCUPANCY SENSOR WHOSE OUTPUT IS CONTROLLED BY A LOCAL WALL SWITCH.

(E) LIGHTS THIS AREA ARE CONTROLLED BY A DUAL RELAY DIGITAL CONTROLLER RE: DETAIL ON SHEET E0.2.

(F) CORRIDOR LIGHTS ARE CONTROLLED BY SINGLE RELAY DIGITAL CONTROL UNIT WITH AN INPUT/OUTPUT INTERFACE DEVICE, POWER PACK AND 24V OCCUPANCY SENSOR(S). RE: DETAIL ON SHEET E0.2.

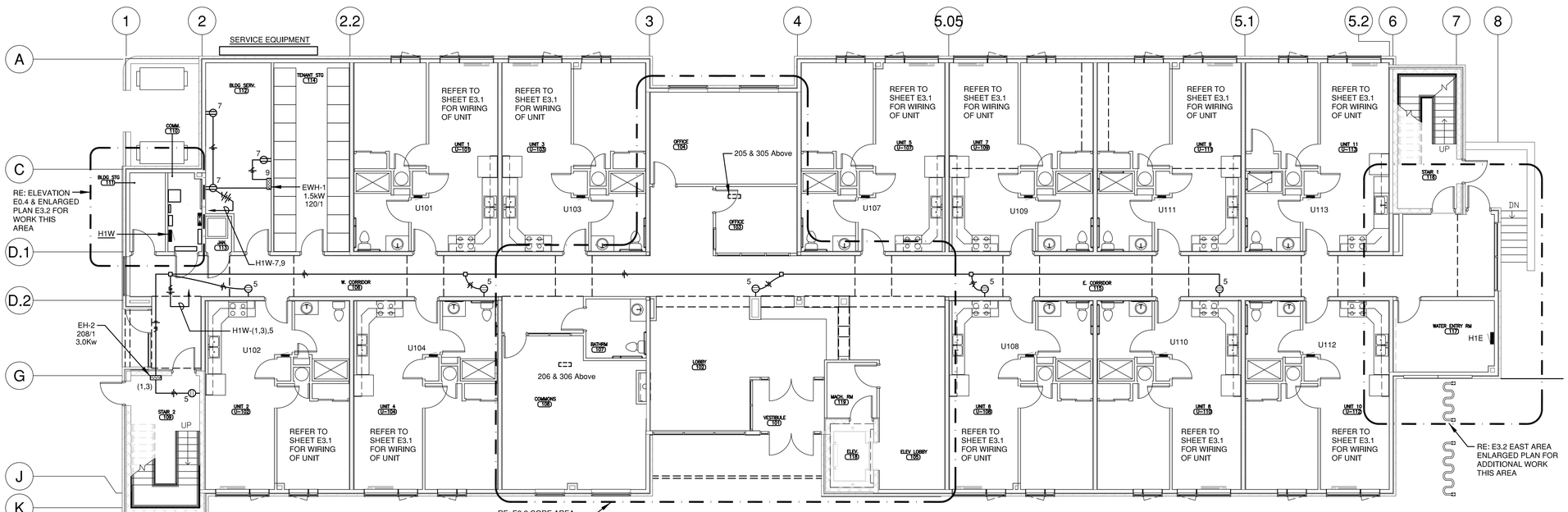

FIRST FLOOR - POWER PLAN

SCALE: 1/8" = 1'-0"

0 4' 8' 16'

KOHNERT ELECTRICAL ENGINEER's, INC.
911 South 8th Steet
Colorado Springs Co 90905
Phone (719) 633-2637
Fax: (719) 633-3465
email@kohnertee.com

PROJECT NUMBER:	2019.042
PHASE:	Permit Set
PHASE ISSUE DATE:	
DESIGNED BY:	LMAN
SCALE:	1/8"=1'-0"

FIRST FLOOR - ELECTRICAL PLANS

SHEET ISSUE DATE: 04/27/20

E1.1

Z:\2019\2019.042\ 2019.042 Elec CD Final 04-27-20 Stamped.dwg Apr 27, 2020 - 9:26am

THE RIGHT PLACE
CARDINAL CAPITAL MGMT.
A SUPPORTIVE HOUSING FACILITY

HGF ARCHITECTS INC.

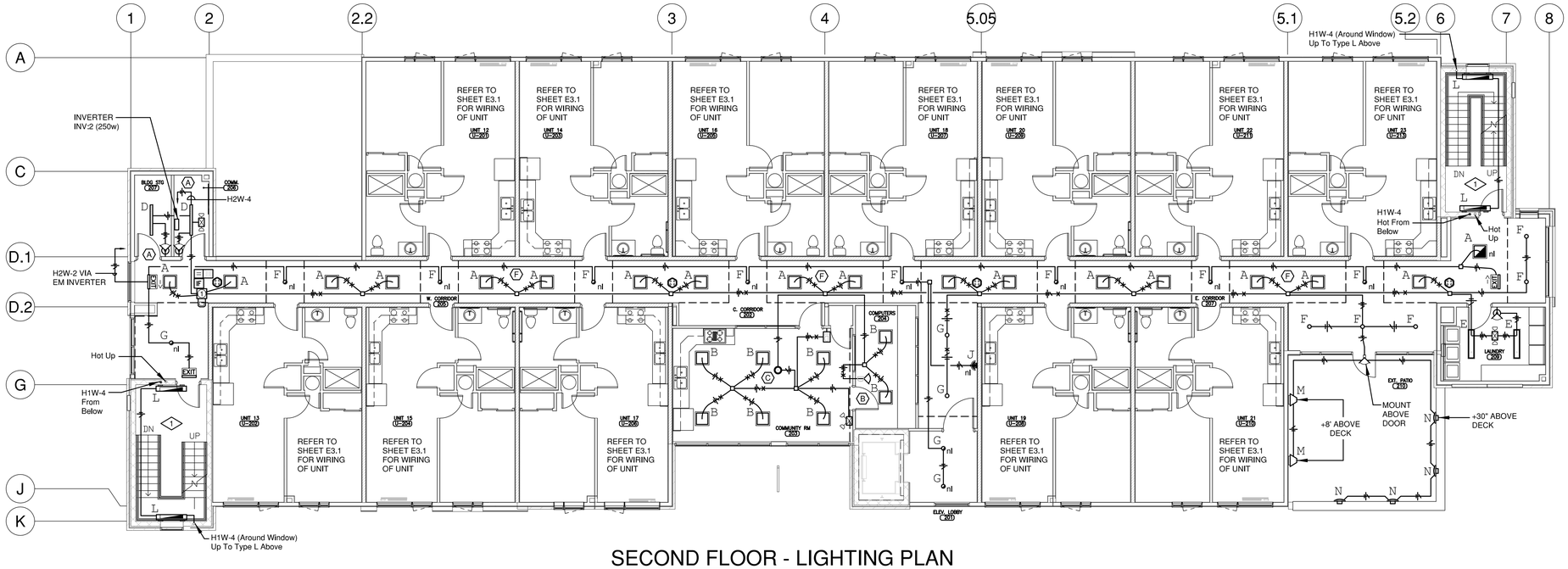

SECOND FLOOR - LIGHTING PLAN

SCALE: 1/8" = 1'-0"

0 4' 8' 16'

POWER WORK NOTES:

1. REFER TO MECHANICAL DRAWINGS FOR EXACT LOCATION(S) OF ALL MECHANICAL EQUIPMENT.
2. ELECTRICAL CONTRACTOR TO CONFIRM ALL MECHANICAL EQUIPMENT CONNECTIONS PRIOR TO ROUGH-IN.
3. ELECTRICAL CONTRACTOR SHALL REFER TO ARCHITECTURAL CASEWORK DRAWINGS PRIOR TO ROUGH-IN.
4. ALL UNIT KITCHEN RECEPTACLES TO BE TAMPER RESISTANT GFI PROTECTED RECEPTACLES THRU COMBINATION AFCI/GFCI BREAKER IN PANEL. RE: UNIT PANEL SCHEDULE AND 1/4" SCALE DRAWINGS ON SHEET E3.1.

DIAMOND NOTES:

<1> STAIRWAY FIXTURES TO BE WIRED HOT - FIXTURE INCLUDES INTEGRAL EM BATTERY, UPLIGHT TO BE OPERATING 24/7 AND INTEGRAL OCCUPANCY SENSOR TO OPERARATE DOWN LIGHT COMPONENT.

LIGHTING PLAN - CONTROL EQUIPMENT WORK NOTES:

<A> LIGHT(S) CONTROLLED BY A 1-P WALL MOUNTED (120V.) DUAL TECHNOLOGY OCCUPANCY SENSOR.

<B> LIGHTS CONTROLLED BY A LINE VOLTAGE DUAL TECHNOLGY WALL MOUNTED OCCUPANCY SENSOR SWITCH WITH INTEGRAL 0-10V DIMMING FEATURE.

<C> LIGHTS CONTROLLED BY A CEILING MOUNTED LINE VOLTAGE DUAL TECH. OCCUPANCY SENSOR WHOSE OUTPUT IS CONTROLLED BY A LOCAL WALL MOUNTED 0-10V DIMMING SWITCH WITH INTEGRAL POWER PACK.

<D> LIGHTS CONTROLLED BY A CEILING MOUNTED LINE VOLTAGE DUAL TECH. OCCUPANCY SENSOR WHOSE OUTPUT IS CONTROLLED BY A LOCAL WALL SWITCH.

<E> LIGHTS THIS AREA ARE CONTROLLED BY A DUAL RELAY DIGITAL CONTROLLER RE: DETAIL ON SHEET E0.2.

<F> CORRIDOR LIGHTS ARE CONTROLLED BY SINGLE RELAY DIGITAL CONTROL UNIT WITH AN INPUT/OUTPUT INTERFACE DEVICE, POWER PACK AND 24V OCCUPANCY SENSOR(S). RE; DETAIL ON SHEET E0.2.

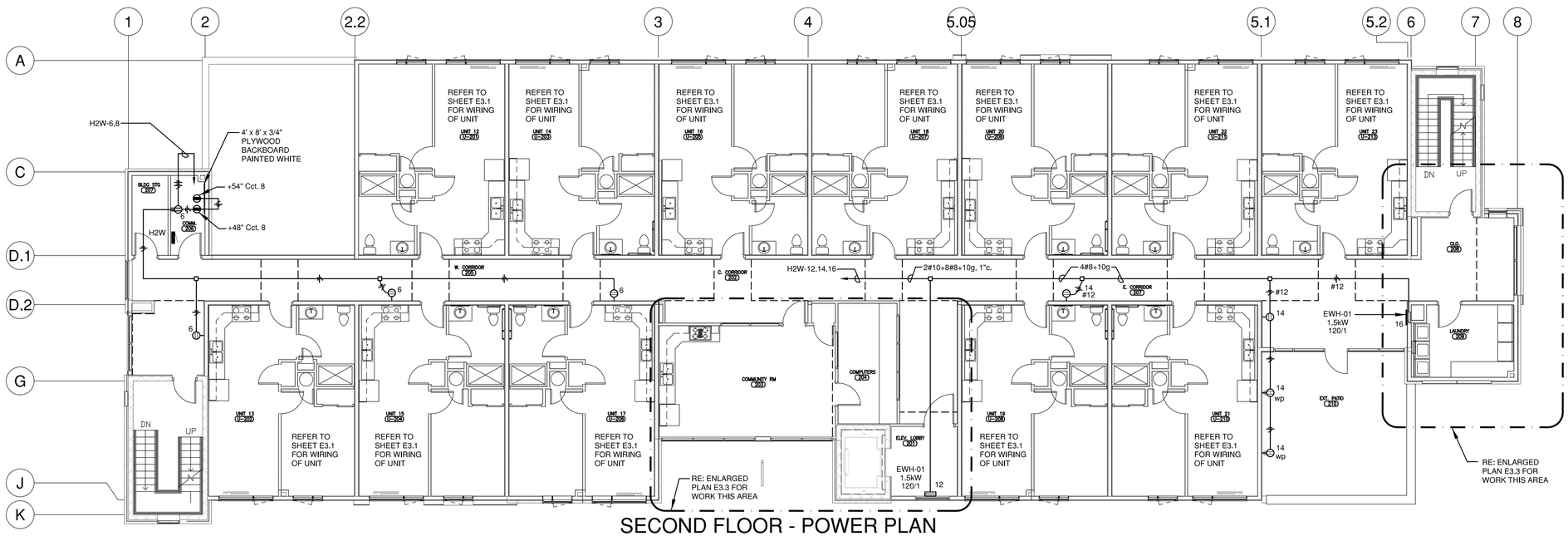

SECOND FLOOR - POWER PLAN

SCALE: 1/8" = 1'-0"

0 4' 8' 16'

KOHNERT ELECTRICAL ENGINEER'S, INC.

911 South 8th Steet
Colorado Springs Co 80905
Phone (719) 633-2637
Fax: (719) 633-3465
email@kohnertee.com

PROJECT NUMBER:	2019.042
PHASE:	Permit Set
PHASE ISSUE DATE:	
DESIGNED BY:	LMAK
SCALE:	1/8"=1'-0"

2ND FLOOR - ELECTRICAL PLANS

SHEET ISSUE DATE: 04/27/20

E1.2

COLORADO REGISTERED
LUIS M. ALVAREZ
No. 33305
PROFESSIONAL ENGINEER

Z:\2019\2019.042\ 2019.042 Elec CD Final 04-27-20 Stamped.dwg Apr 27, 2020 - 9:25am

THE RIGHT PLACE
CARDINAL CAPITAL MGMT.
A SUPPORTIVE HOUSING FACILITY

HGF ARCHITECTS INC.

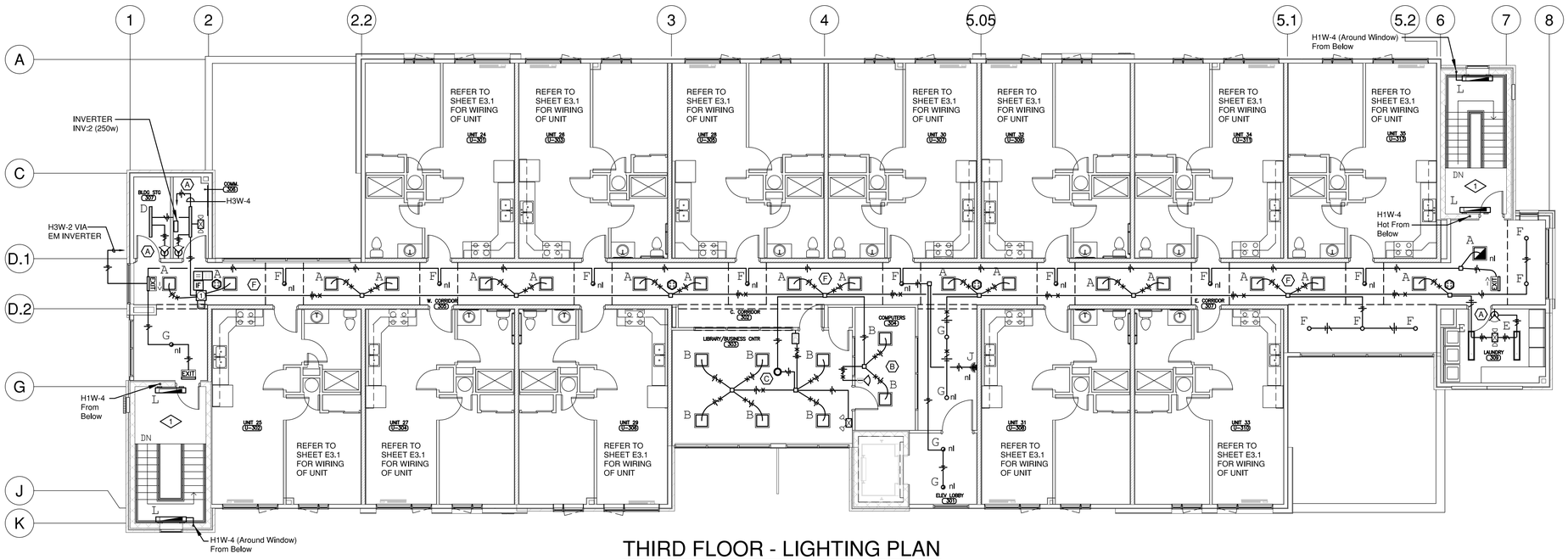

THIRD FLOOR - LIGHTING PLAN

SCALE: 1/8" = 1'-0"

0 4' 8' 16'

POWER WORK NOTES:

1. REFER TO MECHANICAL DRAWINGS FOR EXACT LOCATION(S) OF ALL MECHANICAL EQUIPMENT.
2. ELECTRICAL CONTRACTOR TO CONFIRM ALL MECHANICAL EQUIPMENT CONNECTIONS PRIOR TO ROUGH-IN.
3. ELECTRICAL CONTRACTOR SHALL REFER TO ARCHITECTURAL CASEWORK DRAWINGS PRIOR TO ROUGH-IN.
4. ALL UNIT KITCHEN RECEPTACLES TO BE TAMPER RESISTANT GFI PROTECTED RECEPTACLES THRU COMBINATION AFCI/GFCI BREAKER IN PANEL. RE: UNIT PANEL SCHEDULE AND 1/4" SCALE DRAWINGS ON SHEET E3.1.

DIAMOND NOTES:

(1) STAIRWAY FIXTURES TO BE WIRED HOT - FIXTURE INCLUDES INTEGRAL EM BATTERY, UPLIGHT TO BE OPERATING 24/7 AND INTEGRAL OCCUPANCY SENSOR TO OPERARATE DOWN LIGHT COMPONENT.

LIGHTING PLAN - CONTROL EQUIPMENT WORK NOTES:

(A) LIGHT(S) CONTROLLED BY A 1-P WALL MOUNTED (120V.) DUAL TECHNOLOGY OCCUPANCY SENSOR.

(B) LIGHTS CONTROLLED BY A LINE VOLTAGE DUAL TECHNOLGY WALL MOUNTED OCCUPANCY SENSOR SWITCH WITH INTEGRAL 0-10V DIMMING FEATURE.

(C) LIGHTS CONTROLLED BY A CEILING MOUNTED LINE VOLTAGE DUAL TECH. OCCUPANCY SENSOR WHOSE OUTPUT IS CONTROLLED BY A LOCAL WALL MOUNTED 0-10V DIMMING SWITCH WITH INTEGRAL POWER PACK.

(D) LIGHTS CONTROLLED BY A CEILING MOUNTED LINE VOLTAGE DUAL TECH. OCCUPANCY SENSOR WHOSE OUTPUT IS CONTROLLED BY A LOCAL WALL SWITCH.

(E) LIGHTS THIS AREA ARE CONTROLLED BY A DUAL RELAY DIGITAL CONTROLLER RE: DETAIL ON SHEET E0.2.

(F) CORRIDOR LIGHTS ARE CONTROLLED BY SINGLE RELAY DIGITAL CONTROL UNIT WITH AN INPUT/OUTPUT INTERFACE DEVICE, POWER PACK AND 24V OCCUPANCY SENSOR(S). RE: DETAIL ON SHEET E0.2.

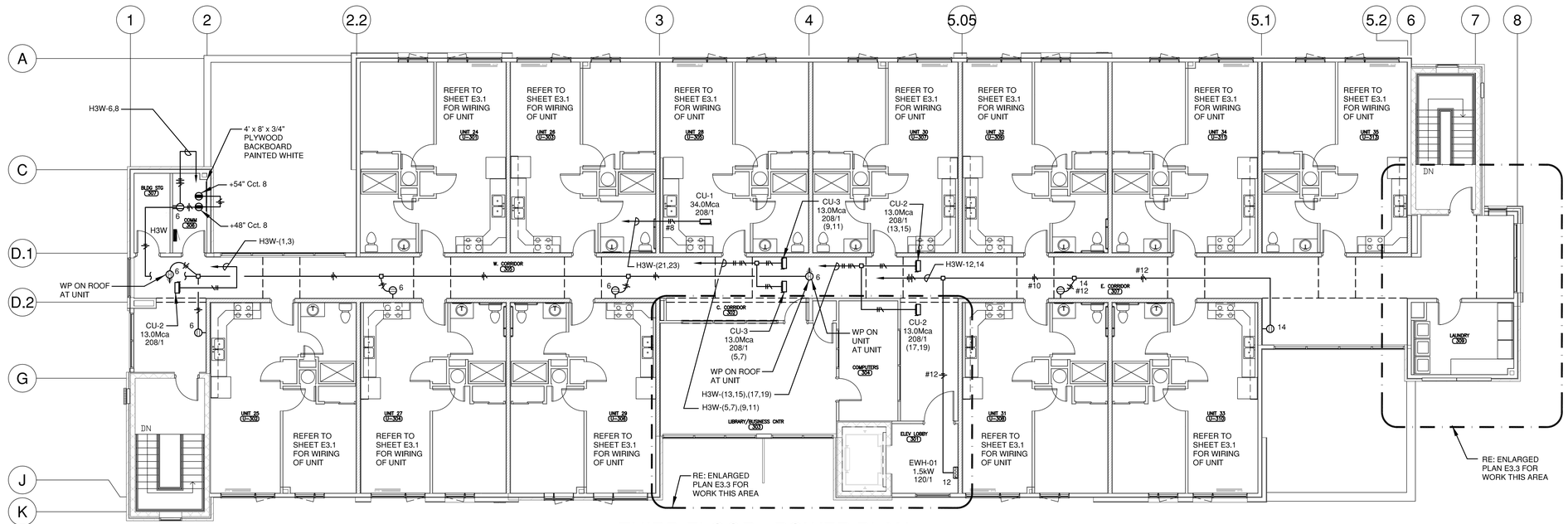

THIRD FLOOR - POWER PLAN

SCALE: 1/8" = 1'-0"

0 4' 8' 16'

KOHNERT ELECTRICAL ENGINEER's, INC.
911 South 8th Steet
Colorado Springs Co 80905
Phone (719) 633-2637
Fax: (719) 633-3455
email@kohnertee.com

COLORADO REGISTERED 33305 PROFESSIONAL ENGINEER

PROJECT NUMBER:	2019.042
PHASE:	Permit Set
PHASE ISSUE DATE:	
DESIGNED BY:	LMAK
SCALE:	1/8"=1'-0"

3RD FLOOR - ELECTRICAL PLANS

SHEET ISSUE DATE: 04/27/20

E1.3

THE RIGHT PLACE A SUPPORTIVE HOUSING FACILITY
CARDINAL CAPITAL MGMT.

Z:\2019\2019.042\ 2019.042 Elec CD Final 04-27-20 Stamped.dwg Apr 27, 2020 - 9:24am

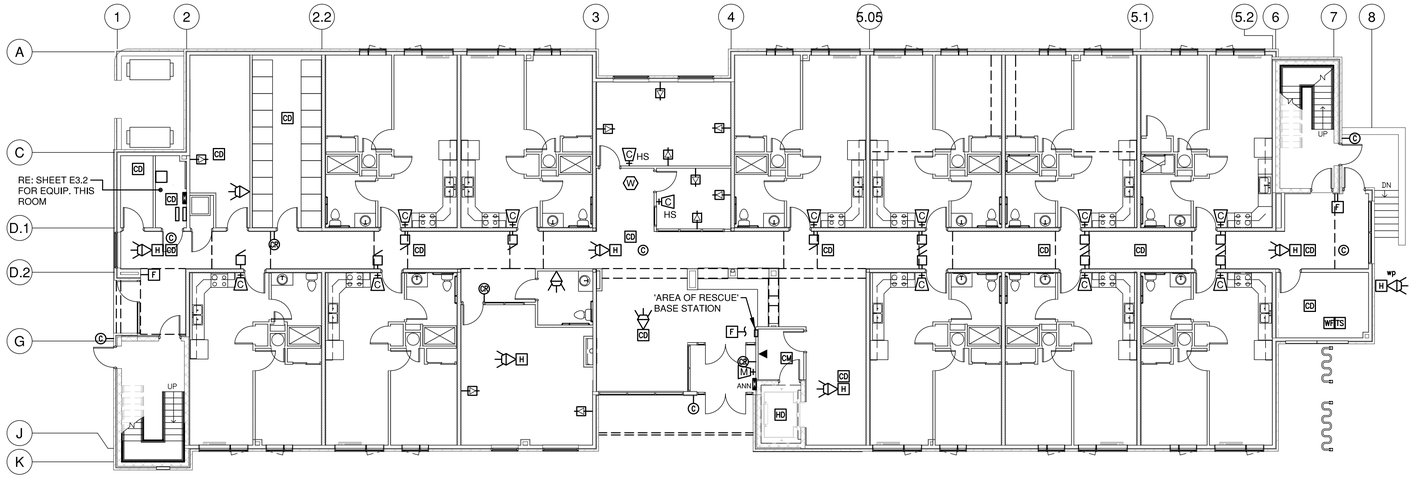

FIRST FLOOR - LOW VOLTAGE SYSTEM PLAN

SCALE: 3/32" = 1'- 0"

0 2' 8' 16'

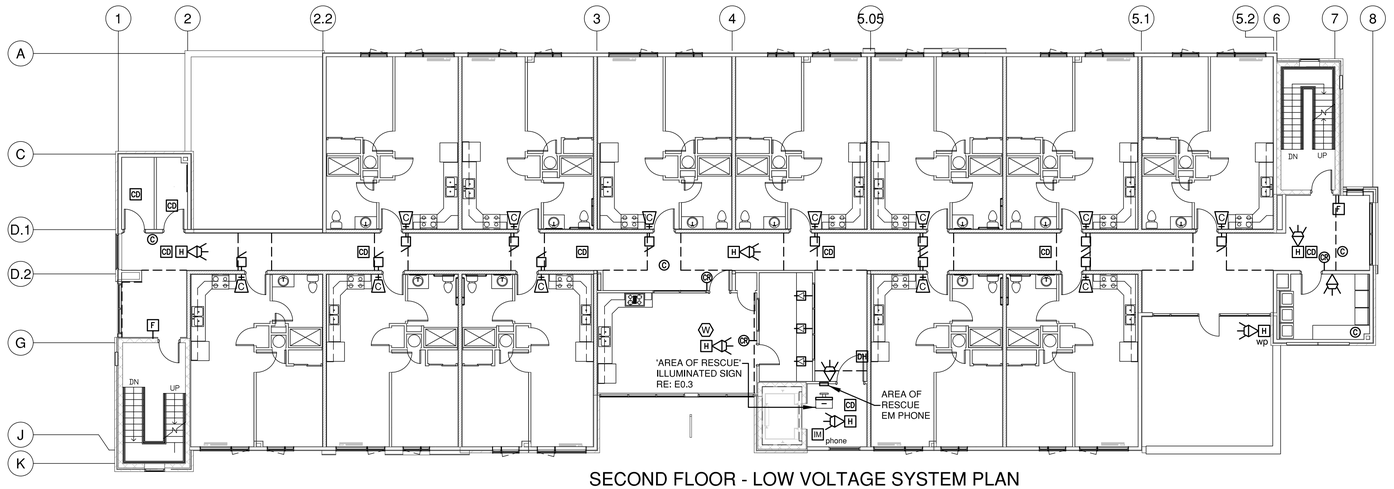

SECOND FLOOR - LOW VOLTAGE SYSTEM PLAN

SCALE: 3/32" = 1'- 0"

0 2' 8' 16'

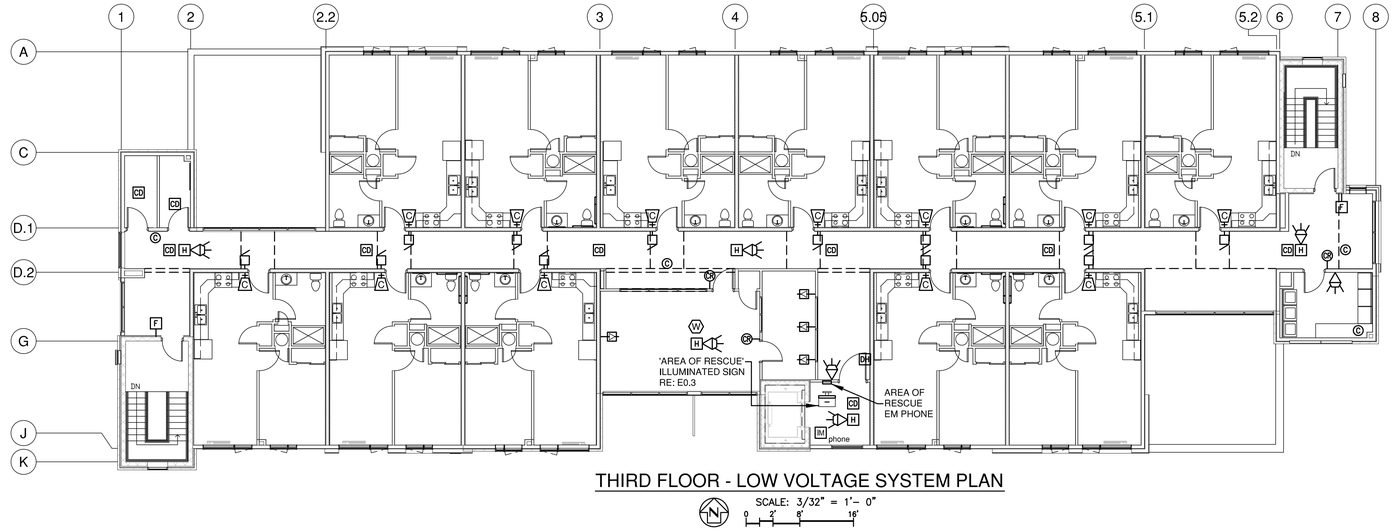

THIRD FLOOR - LOW VOLTAGE SYSTEM PLAN

SCALE: 3/32" = 1'- 0"

0 2' 8' 16'

HGF ARCHITECTS INC.

COLORADO REGISTERED 33305 PROFESSIONAL ENGINEER

KOHNERT ELECTRICAL ENGINEER's, INC.

911 South 8th Steet
Colorado Springs Co 80905
Phone (719) 633-2637
Fax: (719) 633-3465
email@kohnertee.com

PROJECT NUMBER:	2019.042
PHASE:	Permit Set
PHASE ISSUE DATE:	
DESIGNED BY:	LMAK
SCALE:	3/32"=1'-0"

LOW VOLATAGE SYSTEMS PLAN

SHEET ISSUE DATE: 04/27/20

E2.1

THE RIGHT PLACE
CARDINAL CAPITAL MGMT.
A SUPPORTIVE HOUSING FACILITY

Z:\2019\2019.042\ 2019.042 Elec CD Final 04-27-20 Stamped.dwg Apr 27, 2020 - 9:23am

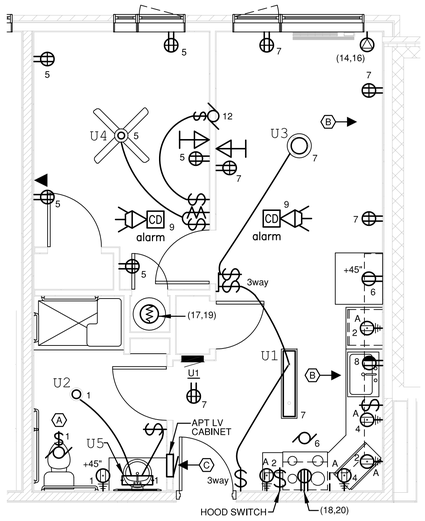

1/4 SCALE PLAN - TYPE A UNITS

N SCALE: 1/4" = 1'-0"

0 2' 4' 8'

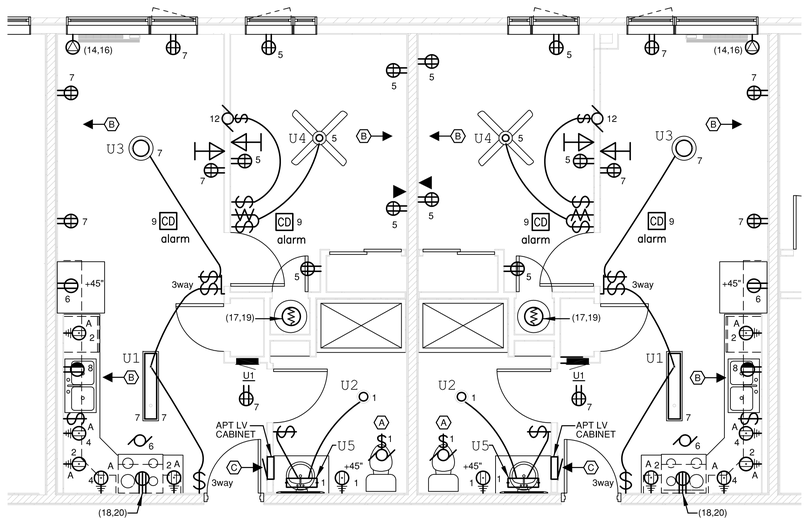

1/4 SCALE PLAN - TYPE B UNITS

N SCALE: 1/4" = 1'-0"

0 2' 4' 8'

POWER BRANCH CIRCUIT REQUIREMENTS

15a GENERAL LIGHTING BRANCH CIRCUITS (x#14+g).
20a GENERAL LIGHTING BRANCH CIRCUITS (x#12+g).
30a A/C UNIT & DRYER BRANCH CIRCUIT (2#10+g).
50a ELECTRIC RANGE BRANCH CIRCUIT (3#6+g).

WIRING METHODS IN UNITS MAY BE MC OR FLEXIBLE NON METALLIC CONDUIT SYSTEMS AS ALLOWED BY THE NATIONAL ELECTRICAL CODE. NMC ALLOWED FOR APARTMENT UNIT WIRING ONLY.

ALL 'AFCI' CIRCUITS REQUIRE A DEDICATED NEUTRAL

IT IS THE CONTRACTORS's RESPONSIBILITY NOT TO EXCEED OUTLET SPACING AS REQUIRED BY THE NATIONAL ELECTRICAL CODE.

IT IS THE CONTRACTOR'S RESPONSIBILTY TO ADHERE TO ALL APPLICABLE SECTIONS OF THE NEC. ANY DESCREPANCIES BETWEEN THESE DRAWINGS AND THE NEC SHALL BE BROUGHT TO THE ENGINEER's ATTENTION PRIOR TO ROUGH-IN. FAILURE TO BRING SUCH ITEMS TO THE ATTENTION OF THE ENGINEER, RESULTING IN ANY TYPE OF MODIFICATIONS TO THE INSTALLATION, SHALL BE AT THE CONTRACTOR's EXPENSE.

UNIT HEX NOTES:

(A) EXHAUST FAN SHALL BE WIRED HOT AND RUN CONTINUOSLY AT SPEED SET BY MECHANICAL. UPON ACTIVATION OF OCCUPANCY SENSOR LOCATED ON FAN, FAN TO RUN HIGH UNTIL TIMED OUT. WIRE TO CIRCUIT INDICATED. OBTAIN WIRING DIAGRAM FROM EQUIPMENT SUPPLIER.

(B) ALL RECEPTACLE ON THIS WALL TO BE 2HOUR UL LISTED FIBERGLASS REINFORCED POLYESTER OUTLET BOXES ALLIED MOULDED PRODUCTS 'FiberglassBOX' SERIES OR APPROVED EQUIVALENT.

(C) REFER TO DIAGRAM ON SHEET E0.4 FOR APARTMENT LOW VOLTAGE CABINET REQUIREMENTS.

GENERAL NOTES

IT IS THE CONTRACTOR's RESPONSIBLITY NOT TO EXCEED OUTLET SPACING AS REQUIRED BY THE NATIONAL ELECTRICAL CODE.

CONFIRM EXACT LOCATION OF MECHANICAL EQUIPMENT PRIOR TO ROUGH-IN.

CATV AND TELEPHONE REQUIREMENTS

PROVIDE FOR TV AND PHONE OUTLETS AS DESCRIBED ON SHEET E0.4.

POWER INTO HOOD

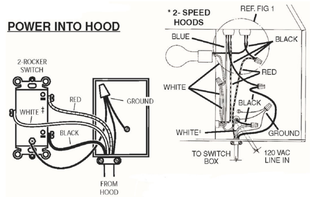

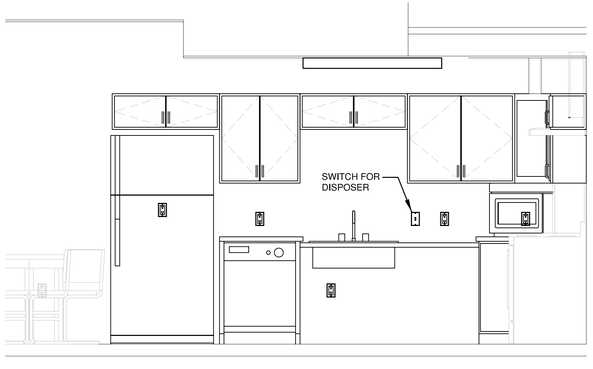

TYPE A UNIT - ELEVATION @ SINK

N SCALE: 1/2" = 1'-0"

0 1' 2' 4'

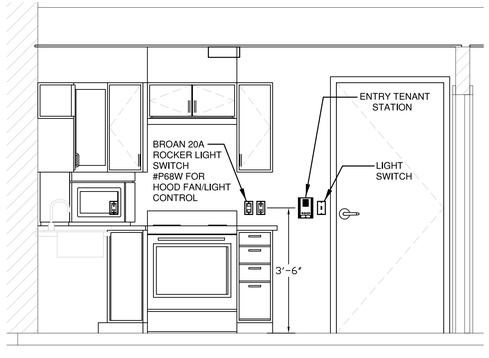

TYPE A UNIT - ELEVATION @ RANGE

N SCALE: 1/2" = 1'-0"

0 1' 2' 4'

FIXTURE SCHEDULE

TYPE	DESCRIPTION & MANUFACTURES CATALOGUE NUMBERS ALL BALLASTS ARE 120V	NOTES	FINISH	LOCATION	LAMP(S) NO.	LAMP(S) TYPE
U1	4' CEILING SURFACE MOUNTED LED EDGE LIT FIXTURE WITH WHITE FINISH AND CLEAR DIFFUSER COLUMBIA #SRP14-30-ML-G-ED-U-SRPSMK-14 OR APPROVED EQUIVALENT.	1	WHITE	VARIOUS	-	4733LUM/ 39W/ 830
U2	6" ROUND IC RATED LED CAN LIGHT WITH 30K LAMP COLOR AND WHITE TRIM RING. PRESCOLITE #LB6LEDA10L-30K-WH-DBXQL OR APPROVED EQUIVALENT.	1	WHITE	VARIOUS	-	12W/ 1000LUM/ 3000 Deg K
U3	SURFACE MOUNTED NOMIMAL 15"DIA. x 5.5" HIGH LED FIXTURE WITH BRUSHED NICKEL TRIM AND ETCHED ALABASTER STYLE GLASS. SEA GULL LIGHTING #75943EN3-962 OR APPROVED EQUIVALENT.	1	NICKEL	VARIOUS	3	80 CRI 9.5W/A19 3000 Deg K
U4	SURFACE MOUNTED 52" DIA CEILING FAN W/(5) BLADES, TWO LIGHT FAN LIGHT KIT WITH SWIRL ALABASTER STYLE GLASS AND LED LAMPS. HUNTER #50908 WITH LIGHT KIT OR APPROVED EQUIVALENT.	1	WHITE	VARIOUS	2	80 CRI 7W - LED 3000 Deg K
U5	24" WIDE OVER MIRROR LIGHT WITH BRONZE FINISH, SATIN ETCHED WHITE GLASS AND LED LAMPS. SEA GULL LIGHTING #44062EN3-962 OR APPROVED EQUIVALENT.	1	NICKEL	BATHROOM	3	80 CRI 9.5W - LED 3000 Deg K

NOTES:

1. SUBSTITUTIONS PRIOR TO BID REQUIRED - ENGINEER MUST RECEIVE PRODUCT DATA 10 DAYS PRIOR TO BID - ONLY PRODUCT LISTED IN AN ADDENDUM WILL BE ACCEPTED.

   FIXTURES TO BE ENERGY STAR RATED OR UTILIZE ENERGY EFFICIENT LAMPS AS LISTED IN GREEN COMMUNITY STANDARDS.

HGF ARCHITECTS INC.

COLORADO REGISTERED 33305 PROFESSIONAL ENGINEER 04/27/20

KOHNERT ELECTRICAL ENGINEER's, INC.
911 South 8th Steet
Colorado Springs Co 80905
Phone (719) 633-2637
Fax: (719) 633-3465
email@kohnertee.com

PROJECT NUMBER: 2019.042
PHASE: Permit Set
PHASE ISSUE DATE:
DESIGNED BY: LMAK
SCALE: 1/4"=1'-0"

1/4 SCALE PLAN - UNITS

SHEET ISSUE DATE: 04/27/20

E3.1

THE RIGHT PLACE
CARDINAL CAPITAL MGMT.
A SUPPORTIVE HOUSING FACILITY

Z:\2019\2019.042\ 2019.042 Elec CD Final 04-27-20 Stamped.dwg Apr 27, 2020 - 9:22am

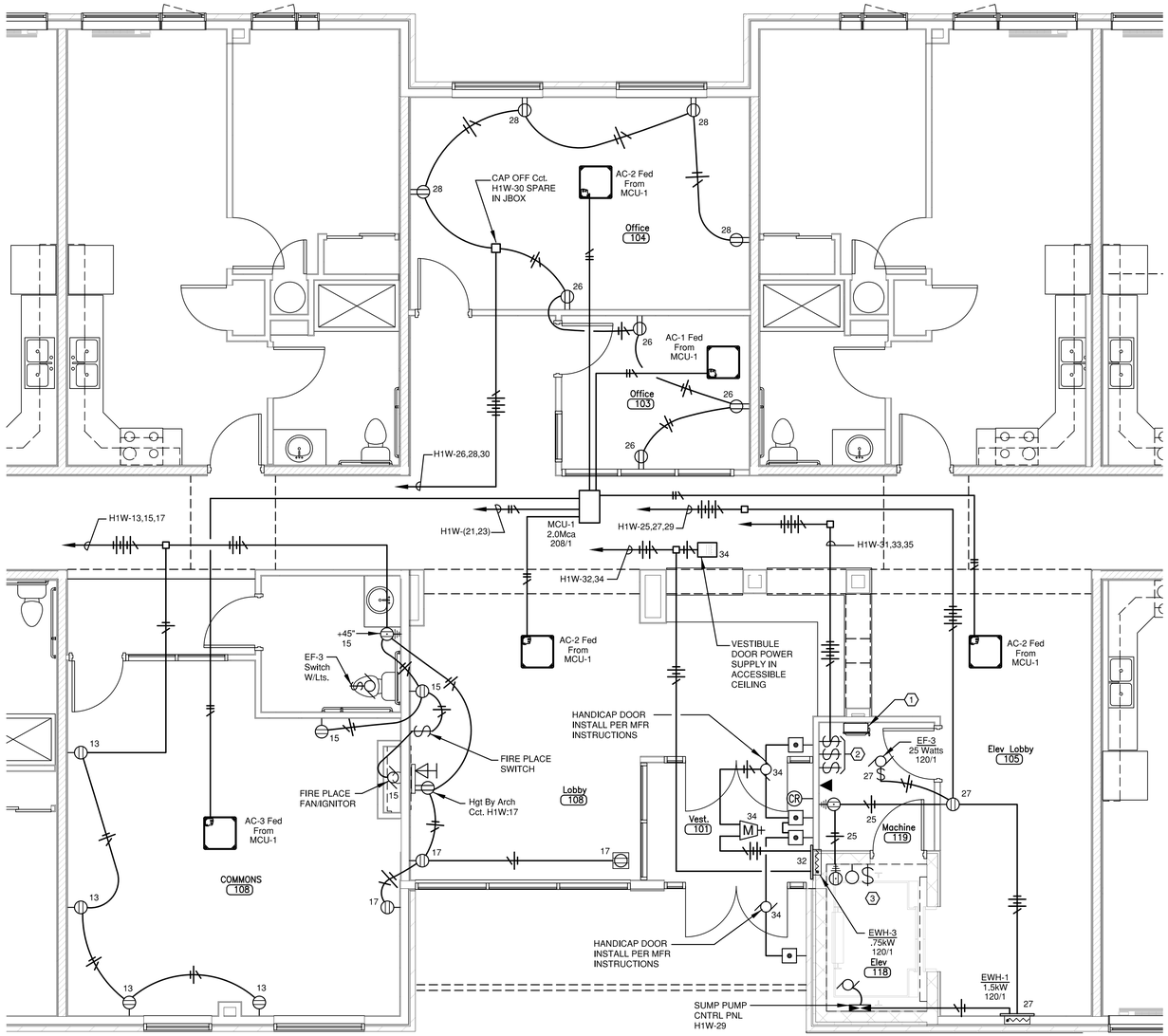

1/4 SCALE PLAN - 1st FLOOR COMMON/LOBBY/OFFICE AREA

N SCALE: 1/4" = 1'-0"

0 2' 4' 8'

ELEVATOR EQUIPMENT ROOM & PIT NEW WORK NOTES:

1. THE INSTALLATION OF THE EQUIPMENT ROOM AND PIT SHALL CONFORM WITH NEC ARTICLE 620 ELEVATORS...'
2. LAYOUT IS CONCEPTUAL. COORDINATE THE FINAL LAYOUT WITH THE EQUIPMENT SUPPLIER AND OTHER TRADES PRIOR TO ROUGH-IN.
3. IF ROOM CONTAINS FIRE PROTECTION COMPONENTS - RE: SHEET E0.1 FOR HEAT DETECTOR LOCATION. WIRE ELEVATOR DISCONNECT SHUNT TRIP THRU HEAT DETECTOR CONTACTS. UTILIZE EXISTING 120V RECEPTACLE CIRCUIT.
4. RECOMMENDED CLEARANCE ABOUT ELEVATOR EQUIPMENT IS 18". COORDINATE WORK SUCH THAT SUCH CLEARANCES ARE MET.
5. AUXILARY COMPONENT WIRING FOR THE ELEVATOR CONTROL SWITCH IS TO BE INSTALLED PER THE MANUFACTURE'S INSTRUCTIONS.
6. PROVIDE A TELEPHONE PORT WITH CABLING TO COMM. ROOM. RE: SHT. E1.1 FOR LOCATION. TERMINATE ON BUILDING PUNCH BLOCKS.

(1) ELEVATOR CONTROL DISCONNECT SWITCH REQUIRMENTS

1. UNIT TO BE A, U.L. LISTED, 100A-3P-600V FUSIBLE WITH FUSES PER MANUFACTURER'S RECOMMENDATION (Class 'J' Fuses) IN A NEMA 1 ENCLOSURE.
2. STANDARD FEATURES: 200K AIC, 120V SHUNT-TRIP, CONTROL POWER TERMINAL BLOCK AND GROUND LUG.
3. PROVIDE WITH THE FOLLOWING OPTIONAL FEATURES:
   a. CONTROL POWER TRANSFORMER
   b. FIRE SAFTEY INTERFACE RELAY
   c. FIRE ALARM VOLTAGE MONITOR RELAY (to monitor Shunt-Trip Voltage).
   d. Auxilary Contacts
4. EATON 'ELEVATOR CONTROL ES SWITCH #ES-1 SERIES OR EQUIVALENT. CONTRACTOR TO CONFIRM FIRE SAFETY INTERFACE RELAY.

(2) ELEVATOR ACCESSORY DISCONNECT SWITCH REQUIRMENTS

1. PROVIDE KEY SWITCHES FOR ELEVATOR ACCESSORIES AND CONTROL LABEL:
   a. ELEVATOR CAB LIGHTS (Cct. H1W:31)
   b. ELEVATOR A/C UNIT (Cct. H1W:33)
   c. ELEVATOR CONTROLS (Cct. H1W:35)

(3) ELEVATOR PIT REQUIREMENTS

1. PROVIDE LIGHT SWITCH, GFCI DUPLEX AND U.L. LISTED LED VAPORTIGHT FOR PIT AREA. LOCATE PER CODE.

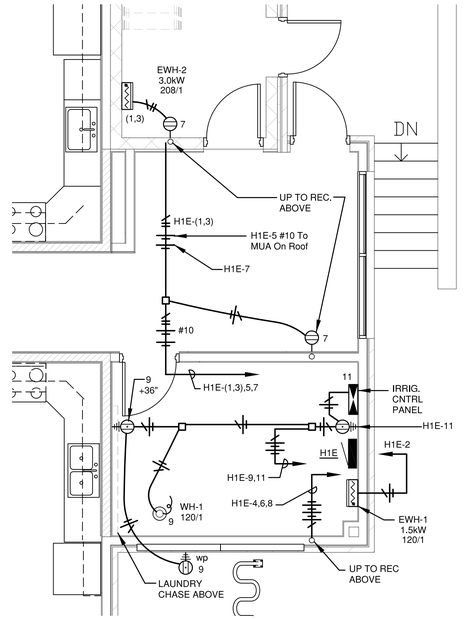

N East Area - Enlarged Power Plan

SCALE: 1/4" = 1' - 0"

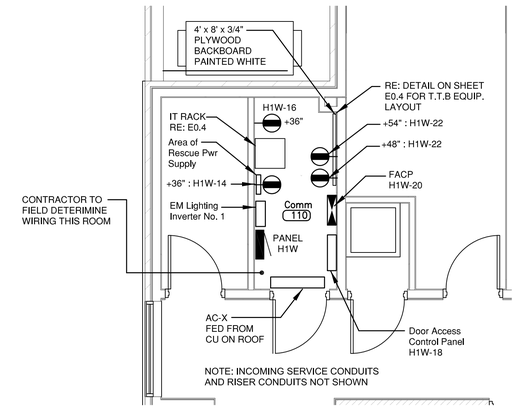

N 1st Floor Comm Room - Enlarged Power Plan

SCALE: 1/4" = 1' - 0"

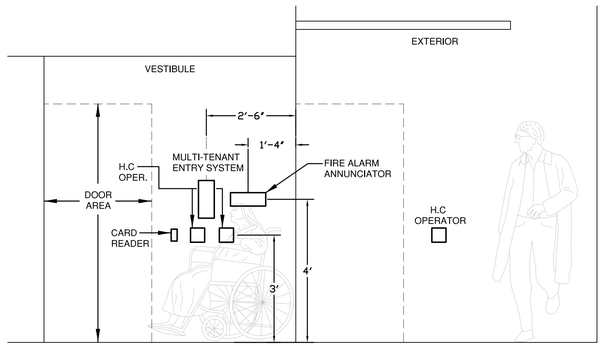

Entry Vestibule Equipment Elevation

SCALE: 1/2" = 1' - 0"

KOHNERT ELECTRICAL ENGINEER's, INC.
911 South 8th Steet
Colorado Springs Co 80905
Phone (719) 633-2637
Fax: (719) 633-3465
email@kohnertee.com

PROJECT NUMBER: 2019.042
PHASE: Permit Set
PHASE ISSUE DATE:
DESIGNED BY: LMAK
SCALE: 1/4"=1'-0"

1/4 SCALE PLAN - 1st FLOOR

SHEET ISSUE DATE: 04/27/20

E3.2

THE RIGHT PLACE
CARDINAL CAPITAL MGMT.
A SUPPORTIVE HOUSING FACILITY

Z:\2019\2019.042\ 2019.042 Elec CD Final 04-27-20 Stamped.dwg Apr 27, 2020 - 9:21am

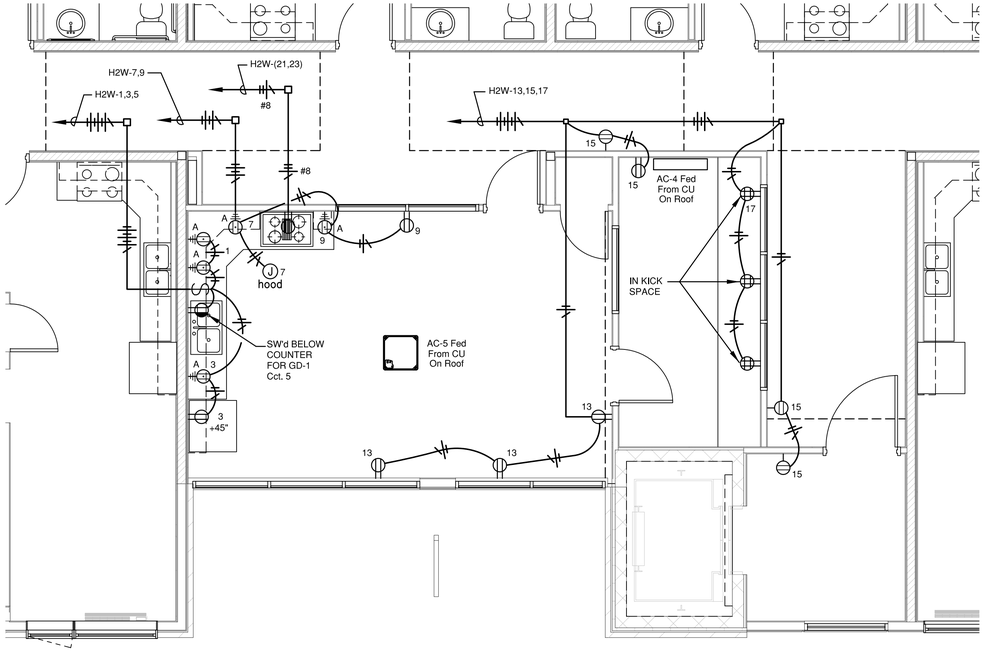

Enlarged 2nd Floor Commons Power Plan

N SCALE: 1/4" = 1'-0"

0 2' 4' 8'

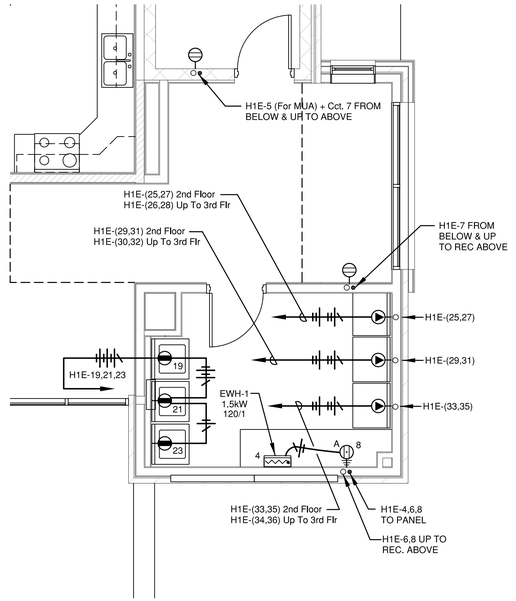

Enlarged 2nd Floor Laundry Room Power Plan

N SCALE: 1/4" = 1'-0"

0 2' 4' 8'

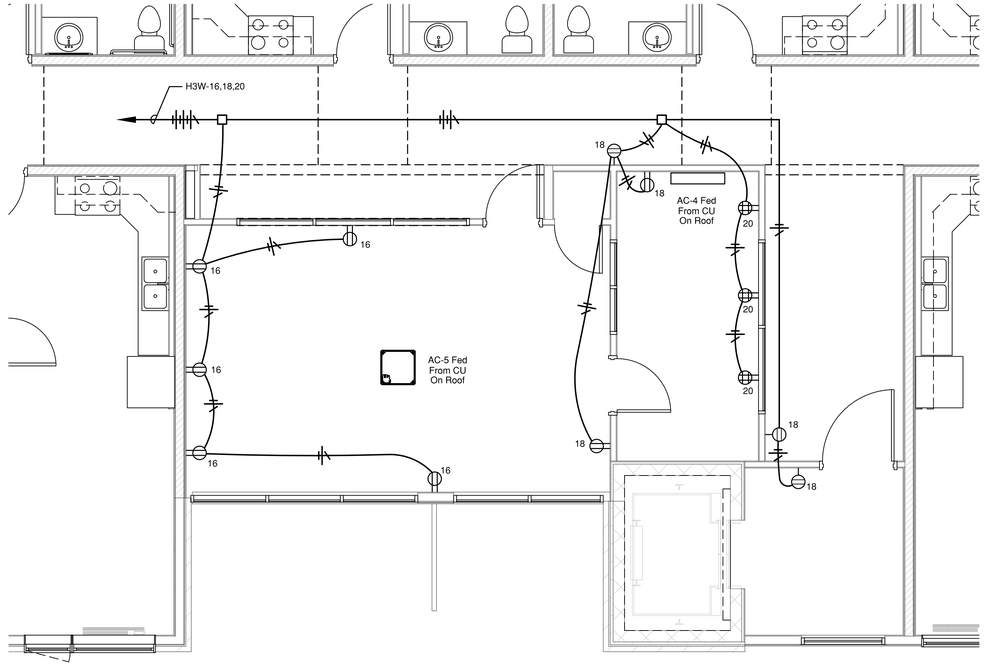

Enlarged 3rd Floor Commons Power Plan

N SCALE: 1/4" = 1'-0"

0 2' 4' 8'

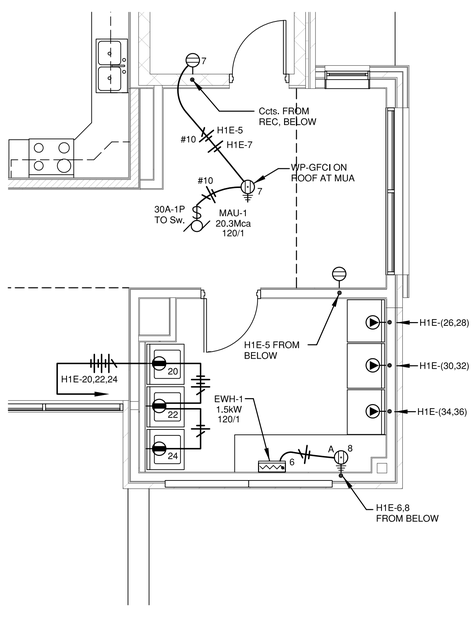

Enlarged 3rd Floor Laundry Room Power Plan

N SCALE: 1/4" = 1'-0"

0 2' 4' 8'

HGF ARCHITECTS INC.

COLORADO REGISTERED
Thomas Hall
PE 33305
PROFESSIONAL ENGINEER

KOHNERT ELECTRICAL ENGINEER's, INC.

911 South 8th Steet
Colorado Springs Co 80905
Phone (719) 633-2637
Fax: (719) 633-3465
email@kohnertee.com

PROJECT NUMBER:	2019.042
PHASE:	PermR Set
PHASE ISSUE DATE:	
DESIGNED BY:	LMAK
SCALE:	1/4"=1'-0"

1/4 SCALE PLANS
2nd & 3rd FLOOR

SHEET ISSUE DATE: 04/27/20

E3.3

THE RIGHT PLACE
CARDINAL CAPITAL MGMT.
A SUPPORTIVE HOUSING FACILITY

Z:\2019\2019.042\ 2019.042 Elec CD Final 04-27-20 Stamped.dwg Apr 27, 2020 - 9:20am

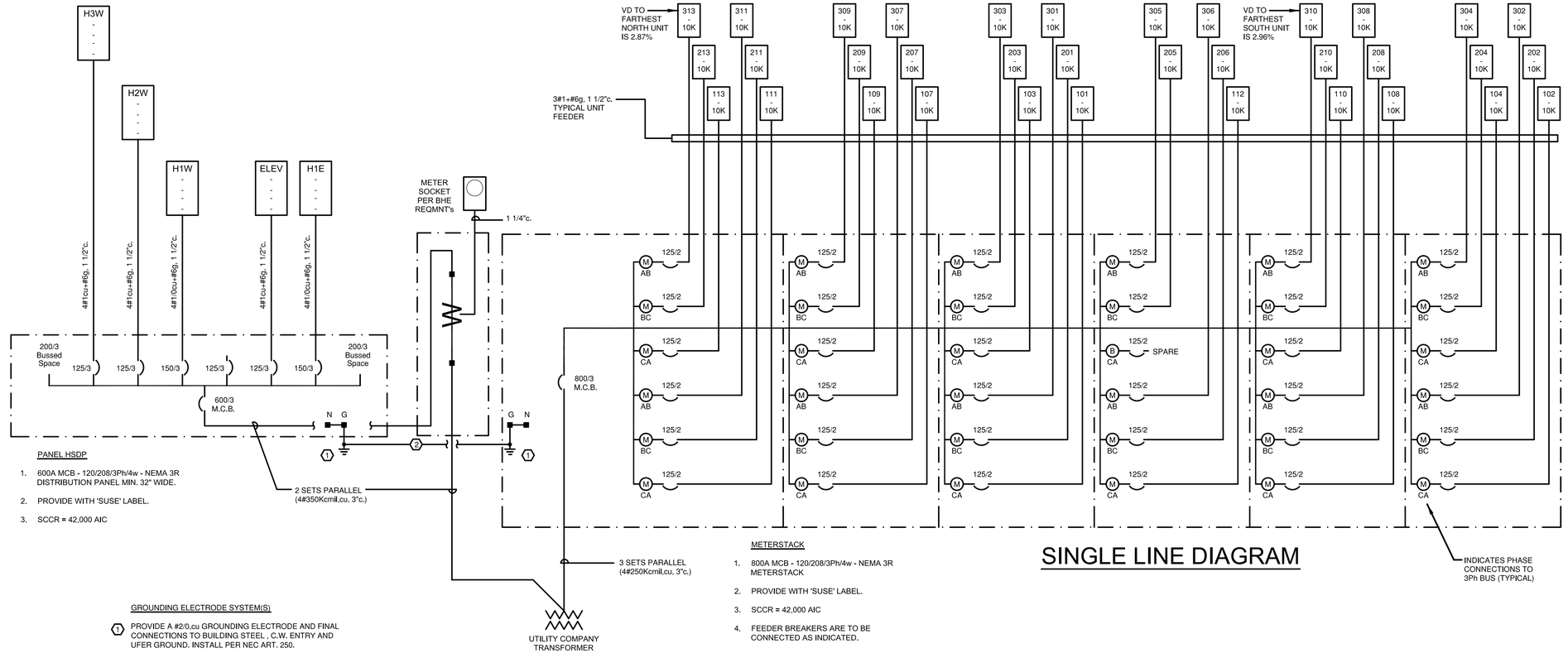

SINGLE LINE DIAGRAM

PANEL HSDP

1. 600A MCB - 120/208/3Ph/4w - NEMA 3R DISTRIBUTION PANEL MIN. 32" WIDE.
2. PROVIDE WITH 'SUSE' LABEL.
3. SCCR = 42,000 AIC

METERSTACK

1. 800A MCB - 120/208/3Ph/4w - NEMA 3R METERSTACK
2. PROVIDE WITH 'SUSE' LABEL.
3. SCCR = 42,000 AIC
4. FEEDER BREAKERS ARE TO BE CONNECTED AS INDICATED.

GROUNDING ELECTRODE SYSTEM(S)

1. PROVIDE A #2/0,cu GROUNDING ELECTRODE AND FINAL CONNECTIONS TO BUILDING STEEL , C.W. ENTRY AND UFER GROUND. INSTALL PER NEC ART. 250.
2. BOND BOTH UFER GROUNDS AT SAME POINT.

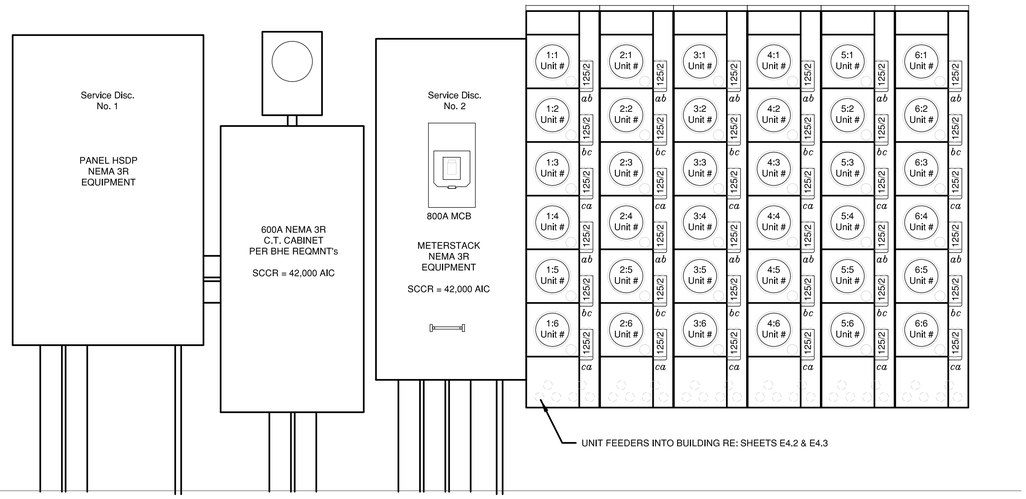

ELEVATION OF ELECTRICAL SERVICE EQUIPMENT LOOKING SOUTH

METERSTACK SUMMARY		
LOAD TYPE	LOAD CODE	UNIT METERS
LIGHTING	Ltg	N/A
MECHANICAL	M	N/A
RECEPTACLE	R	N/A
AIR CONDITIONING	A/C	N/A
GEN. LIGHTING	GL	357.0
DRYER	D	157.5
RANGE	RG	280.0
OTHER	Othr	115.3
DEMAND KVA		* 272.9
DEMAND AMPS		758.2A

* DEMAND KVA BASED UPON NEC TABLE 220.84 = 909.8kVA x .30

LOAD SUMMARY FOR 600A - 120/208/3Ph-4w PANEL HSDP									
Load Type	Load Code	PNL H1W	PNL H2W	PNL H3W	* PNL H1E	Elevator	Conn Kva	Demand Factor	Dmd Kva
LIGHTING	Ltg	4.2	1.4	1.2	0.0	0.0	6.8	1.25	8.5
COMPUTER	Cmp	3.4	1.9	1.9	0.0	0.0	7.1	1.25	8.9
MOTORS	Mtr	1.1	0.0	0.0	2.0	0.0	3.1	1.25	3.9
HEATING	Htg	0.0	0.0	0.0	0.0	0.0	0.0	1.25	0.0
AIR CONDITIONING	A/C	1.6	0.0	16.6	0.0	0.0	18.2	1.25	22.8
RECEPTACLES	Rec	5.8	14.0	3.1	2.5	0.0	25.4	10+50%	17.7
Dryer	Dry	0.0	0.0	0.0	30.0	0.0	30.0	.75	22.5
OTHR	Othr	6.9	8.7	1.5	15.0	27.1	59.2	1.00	59.2
Demand Kva		25.6	24.8	29.1	42.5	27.1	Demand Kva		143.4
Demand Amps		71.1	68.9	80.9	118.1	75.3	Demand Amps		398.4

* DRYER LOAD CALCULATED AT 75% AS ALLOWED BY NEC TABLE 220.54

Calculated Available Fault Currents For The Right Place			
EQUIPMENT	CALCULATED FAULT CURRENT	O.C. DEVICE	SCSR RATING OF EQUIPMENT
METERSTACK	26,294 Sca	800a MCB	42,000 AIC
Closest Unit Panel	9,870 Sca	125/2 Breaker	10,000 AIC
PANEL HSDP	24,283 Sca	600/3 MCB	42,000 AIC
PANEL H1W	9,534 Sca	150/3 Breaker	10,000 AIC
PANEL H2W	8,401 Sca	150/3 Breaker	10,000 AIC
PANEL H3W	7,508 Sca	125/3 Breaker	10,000 AIC
PANEL H1E	2,836 Sca	150/3 Breaker	10,000 AIC
ELEVATOR	4,178 Sca	125/3 Breaker	5,000 AIC
Closest Mech Unit CU	3,025 Sca	15/2 Breaker	5,000 AIC

Fault Current Calculation Notes:

1. Calculations are based upon an Est. 300kVA Service Transformer if a different size is used contact the Engineer for Revised Calculations.
2. Calculated Fault Currents for all Mechanical Equipment are below 5,000 AIC

HGF ARCHITECTS INC.

STATE OF COLORADO REGISTERED LARRY M. KOHNERT 33305 PROFESSIONAL ENGINEER

KOHNERT ELECTRICAL ENGINEER's, INC.
911 South 8th Steet
Colorado Springs Co 80905
Phone (719) 633-2637
Fax: (719) 633-3465
email@kohnertee.com

PROJECT NUMBER: 2019.042
PHASE: Permit Set
PHASE ISSUE DATE:
DESIGNED BY: LMAK
SCALE: 1/4"=1'-0"

SINGLE LINE DIAGRAM
SERVICE CALCULATIONS
SERVICE EQUIPMENT ELEVATION

SHEET ISSUE DATE: 04/27/20

E4.1

Z:\2019\2019.042\ 2019.042 Service Plans E4-X 04-27-20 Stamped.dwg Apr 27, 2020 - 10:19am

THE RIGHT PLACE
CARDINAL CAPITAL MGMT.
A SUPPORTIVE HOUSING FACILITY

SCHEDULE FOR PANEL — H3W

VOLTS/PHASE/WIRE 120/208/3ph-4w — MAIN DEVICE 125a MLO
MOUNTING SURFACE — S.C. RATING 10,000 AIC
NOTES: Provide with Door in Door Piano Hinged Cover
N/A

Duty/Demand Load is Calculated Per NEC : Ltg, Cmp, Htg, Mtr & AC at 125%, Rec @ 10 + 50% and Othr @100%

PHASE A (KVA) 6.8 — CONNECTED KVA 24.20
PHASE B (KVA) 8.0 — LOAD FACTOR 1.20
PHASE C (KVA) 9.4 — DUTY/DEMAND KVA 29.10

AVERAGE AMPS/LEG BASED ON DUTY/DEMAND KVA 80.8

#	DESCRIPTION	LOAD	BRKR	PH	BRKR	LOAD	DESCRIPTION	#
1	AC : Cond Unit W	1,090	15/2	A		250	Ltg : Em Ltg Inverter	2
3	Do	1,090	Do	B	20/1	975	Ltg : 3rd Floor	4
5	AC : CU W Center S	1,090	15/2	C	20/1	1,080	Rec : West Corridor	6
7	Do	1,090	Do	A	20/1	350	Cmp : Tele Board	8
9	AC : CU W Center N	1,090	15/2	B	20/1		Spare	10
11	Do	1,090	Do	C	20/1	1,500	Othr : Elev Lobby EWH	12
13	AC : CU E Center S	1,090	15/2	A	20/1	360	Rec : East Corridor	14
15	Do	1,090	Do	B	20/1	900	Rec : Library West	16
17	AC : CU E Center N	1,090	15/2	C	20/1	720	Rec : Center Lobby	18
19	Do	1,090	Do	A	20/1	1,500	Cmp : Computer Rm	20
21	AC : CU for 1st Flr Cmns	2,830	50/2	B	20/1		Spare	22
23	Do	2,830	Do	C	20/1		Spare	24
25	Space			A			Space	26
27	Space			B			Space	28
29	Space			C			Space	30

ENCLOSURE TYPE: NEMA 1 — BREAKER TYPE: BOLT ON
CLASS OF EQUIPMENT: PANELBOARD — NO. CIRCUITS: 30

SCHEDULE FOR PANEL — H2W

VOLTS/PHASE/WIRE 120/208/3ph-4w — MAIN DEVICE 125a MLO
MOUNTING SURFACE — S.C. RATING 10,000 AIC
NOTES: Provide with Door in Door Piano Hinged Cover
N/A

Duty/Demand Load is Calculated Per NEC : Ltg, Cmp, Htg, Mtr & AC at 125%, Rec @ 10 + 50% and Othr @100%

PHASE A (KVA) 4.9 — CONNECTED KVA 25.97
PHASE B (KVA) 10.4 — LOAD FACTOR 0.93
PHASE C (KVA) 10.7 — DUTY/DEMAND KVA 24.04

AVERAGE AMPS/LEG BASED ON DUTY/DEMAND KVA 66.8

#	DESCRIPTION	LOAD	BRKR	PH	BRKR	LOAD	DESCRIPTION	#
1	Rec : Cmnty W Cntr N	1,500	20/1	A	20/1	250	Ltg : Em Ltg Inverter	2
3	Rec : Cmnty W Cntr S	1,500	20/1	B	20/1	1,155	Ltg : 2nd Floor	4
5	Othr : Cmnty Disposer	1,500	20/1	C	20/1	720	Rec : West Corridor	6
7	Rec : Cmnty N Cntr W	1,500	20/1	A	20/1	360	Cmp : Tele Board	8
9	Rec : Cmnty N Cntr E	1,500	20/1	B	20/1		Spare	10
11	Spare	1,500	20/1	C	20/1	1,500	Othr : Elev Lobby EWH	12
13	Rec : Cmnty Rm S	540	20/1	A	20/1	720	Othr : Elev Lobby EWH	14
15	Rec : Center Lobby	720	20/1	B	20/1	1,500	Othr : E Lobby EWH	16
17	Cmp : Cmptr Room	1,500	20/1	C	20/1		Spare	18
19	Spare		20/1	A	20/1		Spare	20
21	Othr : Cmnty Range	4,000		B	20/1		Spare	22
23	Do	4,000		C	20/1		Spare	24
25	Space			A			Space	26
27	Space			B			Space	28
29	Space			C			Space	30

ENCLOSURE TYPE: NEMA 1 — BREAKER TYPE: BOLT ON
CLASS OF EQUIPMENT: PANELBOARD — NO. CIRCUITS: 30

SCHEDULE FOR PANEL — U1

VOLTS/PHASE/WIRE 120/208/1ph-3w — MAIN DEVICE 125a MLO
MOUNTING FLUSH — S.C. RATING Per Single Line
NOTES: A = 'AFCI' Breaker : AG = AFCI/GFIC Combination Breaker
N/A

Duty/Demand Load is Calculated Per NEC : Ltg, Cmp, Htg, Mtr & AC at 125%, Rec @ 10 + 50% and Othr @100%

PHASE A (KVA) 13.5 — CONNECTED KVA 26.02
PHASE B (KVA) 12.5 — LOAD FACTOR 0.82
PHASE C (KVA) N/A — DUTY/DEMAND KVA 21.33

AVERAGE AMPS/LEG BASED ON DUTY/DEMAND KVA 102.5

#	DESCRIPTION	LOAD	BRKR	PH	BRKR	LOAD	DESCRIPTION	#
1	GL : Bath	1,500	A20/1	A	AG20/1	1,500	GL : Kitchen	2
3	GL : Smoke Detectors	300	A20/1	B	AG20/1	1,500	GL : Kitchen	4
5	GL : Bedroom	1,080	A20/1	A	AG20/1	1,500	GL : Hood + Microwave	6
7	GL : Living Room	1,130	A20/1	B	AG20/1	1,500	GL : Disposer/DW	8
9	Spare		A20/1	A	AG20/1		Spare	10
11	Spare		A20/1	B	A20/1	205	Othr : Transfer Grille	12
13	Spare		A20/1	A	20/2	1,650	Othr : PTAC	14
15	Othr : Water Heater	2,250	30/2	B	Do	1,650	Do	16
17	Do	2,250	Do	A	50/2	4,000	Othr : Range	18
19	Space			B	Do	4,000	Do	20

ENCLOSURE TYPE: NEMA 1 — BREAKER TYPE: PLUG ON
CLASS OF EQUIPMENT: LOADCENTER — NO. CIRCUITS: 20

SCHEDULE FOR PANEL — H1W

VOLTS/PHASE/WIRE 120/208/3ph-4w — MAIN DEVICE 200a MLO
MOUNTING SURFACE — S.C. RATING 10,000 AIC
NOTES: Provide with Door in Door Piano Hinged Cover
N/A

Duty/Demand Load Is Calculated Per NEC : Ltg, Cmp, Htg, Mtr & AC at 125%, Rec @ 10 + 50% and Othr @100%

PHASE A (KVA) 8.5 — CONNECTED KVA 25.13
PHASE B (KVA) 11.6 — LOAD FACTOR 1.10
PHASE C (KVA) 5.0 — DUTY/DEMAND KVA 27.71

AVERAGE AMPS/LEG BASED ON DUTY/DEMAND KVA 77.0

#	DESCRIPTION	LOAD	BRKR	PH	BRKR	LOAD	DESCRIPTION	#
1	Othr : West Stair EWH	1,500	20/2	A		250	Ltg : Em Ltg Inverter	2
3	Do	1,500	Do	B	20/1	1,455	Ltg : Corridor + Stairs	4
5	Rec : West Corridor	1,080	20/1	C	20/1	755	Ltg : Off/Lby/Cmns	6
7	Rec : Building Services	540	20/1	A	20/1	735	Ltg : Exterior	8
9	Othr : Bldg Serv. EWH	1,500	20/1	B	20/1		Spare	10
11	Spare		20/1	C	20/1		Spare	12
13	Rec : Commons	720	20/1	A	20/1	350	Cmp : Refuge Pwr Sply	14
15	Rec : Commons E + Tlt	720	20/1	B	20/1	1,500	Cmp : IT Rack UPS	16
17	Rec : Lobby	720	20/1	C	20/1	350	Cmp : Door Control Panel	18
19	Spare		20/1	A	20/1	600	Cmp : Fire Alarm Panel	20
21	AC : MCU-1	240	15/2	B	20/1	600	Cmp : Phone + Aiphone	22
23	Do	240	Do	C	20/1		Spare	24
25	Rec : Elev Rm + Plt	540	20/1	A	20/1	720	Rec : Center Office	26
27	Othr : Elev. Lby EWH+Rec	1,680	20/1	B	20/1	720	Rec : North Office	28
29	Mtr : Elev Plt Sump	1,130	20/1	C	20/1		Spare @ North Office	30
31	Ltg : Elevator	1,000	20/1	A	20/1	1,500	Othr : Vestibule EWH	32
33	AC : Elevator	1,130	20/1	B	20/1	600	Othr : Aiphone/HC Doors	34
35	Othr : Elev. Controls	750	20/1	C	20/1		Spare	36
37	Spare		20/1	A			Space	38
39	Spare		20/1	B			Space	40
41	Spare		20/1	C			Space	42

ENCLOSURE TYPE: NEMA 1 — BREAKER TYPE: BOLT ON
CLASS OF EQUIPMENT: PANELBOARD — NO. CIRCUITS: 42

SCHEDULE FOR PANEL — H1E

VOLTS/PHASE/WIRE 120/208/3ph-4w — MAIN DEVICE 125a MLO
MOUNTING SURFACE — S.C. RATING 10,000 AIC
NOTES: Provide with Door in Door Piano Hinged Cover
Dry Load at 75% per NEC Table 220.54

Duty/Demand Load Is Calculated Per NEC : Ltg, Cmp, Htg, Mtr & AC at 125%, Rec @ 10 + 50% and Othr @100%

PHASE A (KVA) 17.4 — CONNECTED KVA 50.97
PHASE B (KVA) 16.7 — LOAD FACTOR 0.83
PHASE C (KVA) 16.8 — DUTY/DEMAND KVA 42.46

AVERAGE AMPS/LEG BASED ON DUTY/DEMAND KVA 117.9

#	DESCRIPTION	LOAD	BRKR	PH	BRKR	LOAD	DESCRIPTION	#
1	Othr : East Stair EWH	1,500	20/2	A	20/1	1,500	Othr : Mech Rm EWH	2
3	Do	1,500	Do	B	20/1	1,500	Othr : 2nd Flr Lndry EWH	4
5	Mtr : Make Up Air Unit	1,950	30/1	C	20/1	1,500	Othr : 3rd Flr Lndry EWH	6
7	Rec : Stair + E Lobby	1,080	20/1	A	20/1	360	Rec : Laundry Rms	8
9	Rec : Mech Rm W + WH-1	720	20/1	B	20/1		Spare	10
11	Rec : Mech Rm E + Irrig	360	20/1	C	20/1		Spare	12
13	Spare		20/1	A	20/1		Spare	14
15	Spare		20/1	B	20/1		Spare	16
17	Spare		20/1	C	20/1		Spare	18
19	Othr : 2nd Flr Washer N	1,500	20/1	A	20/1	1,500	Othr : 3rd Flr Washer C	20
21	Othr : 2nd Flr Washer C	1,500	20/1	B	20/1	1,500	Othr : 3rd Flr Washer C	22
23	Othr : 2nd Flr Washer S	1,500	20/1	C	20/1	1,500	Othr : 3rd Flr Washer S	24
25	Dry : 2nd Flr Dryer S	2,500	30/2	A	30/2	2,500	Dry : 3rd Flr Dryer S	26
27	Do	2,500	Do	B	Do	2,500	Do	28
29	Dry : 2nd Flr Dryer C	2,500	30/2	C	30/2	2,500	Dry : 3rd Flr Dryer C	30
31	Do	2,500	Do	A	Do	2,500	Do	32
33	Dry : 2nd Flr Dryer N	2,500	30/2	B	30/2	2,500	Dry : 3rd Flr Dryer N	34
35	Do	2,500	Do	C	Do	2,500	Do	36
37	Space			A			Space	38
39	Space			B			Space	40
41	Space			C			Space	42

ENCLOSURE TYPE: NEMA 1 — BREAKER TYPE: BOLT ON
CLASS OF EQUIPMENT: PANELBOARD — NO. CIRCUITS: 42

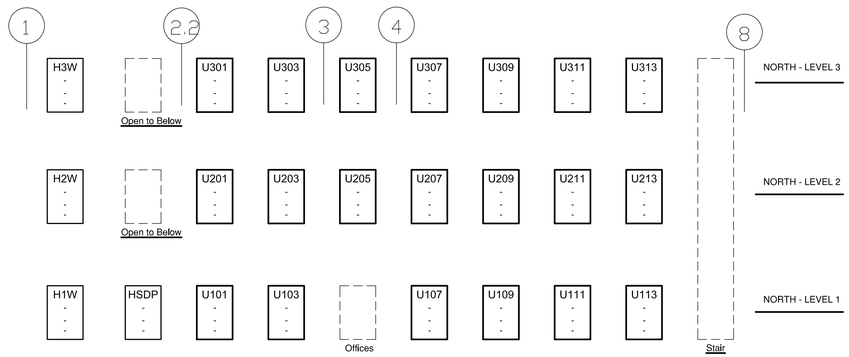

NORTH AREA VERTICAL ARRANGEMENT OF EQUIPMENT

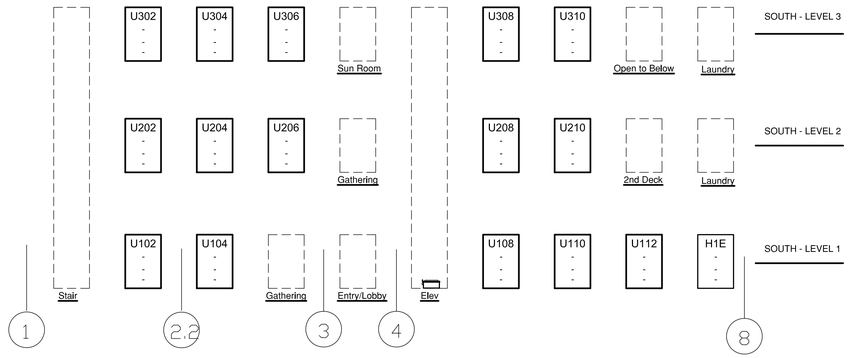

SOUTH AREA VERTICAL ARRANGEMENT OF EQUIPMENT

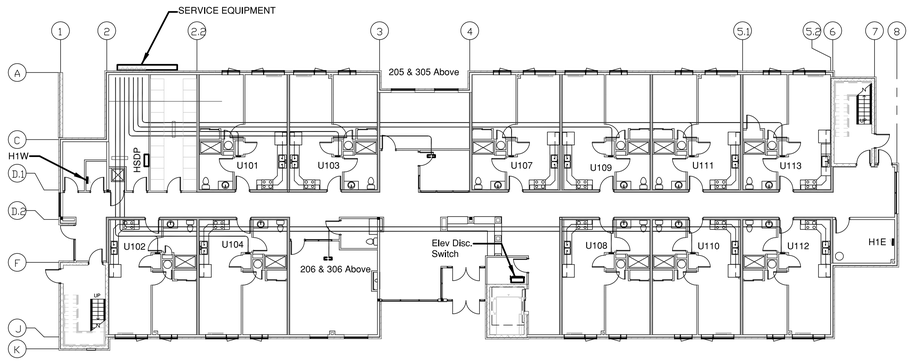

APARTMENT UNIT : FEEDER LAYOUT

N — SCALE: 1/8" = 1'-0"
0 4' 8' 16'

HGF ARCHITECTS INC.

COLORADO REGISTERED — LMAK 33305 — 04/27/2020 — PROFESSIONAL ENGINEER

KOHNERT ELECTRICAL ENGINEER's, INC.
911 South 8th Steet
Colorado Springs Co 80905
Phone (719) 633-2637
Fax: (719) 633-3465
email@kohnertee.com

PROJECT NUMBER: 2019.042
PHASE: Permit Set
PHASE ISSUE DATE:
DESIGNED BY: LMAK
SCALE: 1/4"=1'-0"

SERVICE ELEVATION & CALC's
U.G. FEEDER LAYOUT

SHEET ISSUE DATE: 04/27/20

E4.2

Z:\2019\2019.042\ 2019.042 Service Plans E4.X 04-27-20 Stamped.dwg Apr 27, 2020 - 10:20am

THE RIGHT PLACE
CARDINAL CAPITAL MGMT.
A SUPPORTIVE HOUSING FACILITY

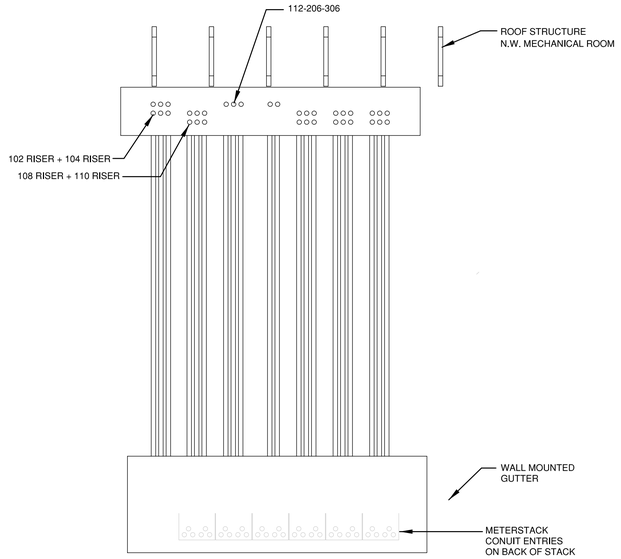

LOOKING NORTH INSIDE BUILDING SERVICES

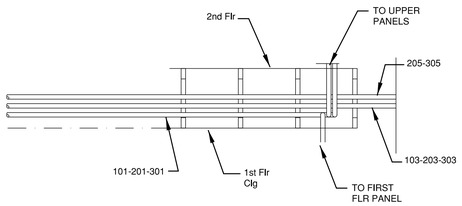

UNIT FEEDER CONDUIT RISER

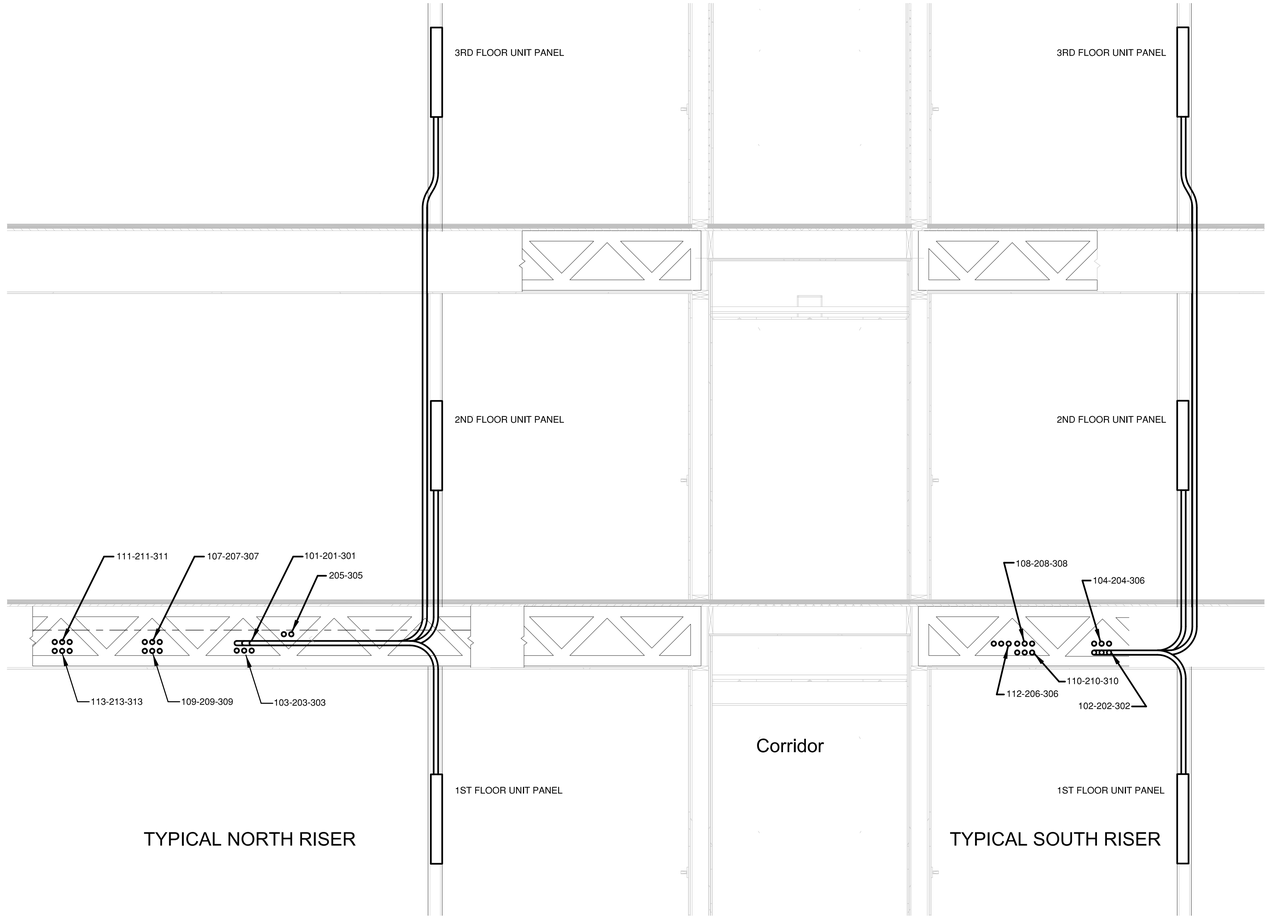

TYPICAL NORTH RISER

TYPICAL SOUTH RISER

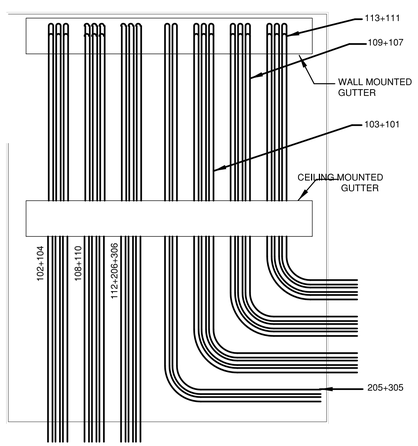

Building Services Ceiling Plan

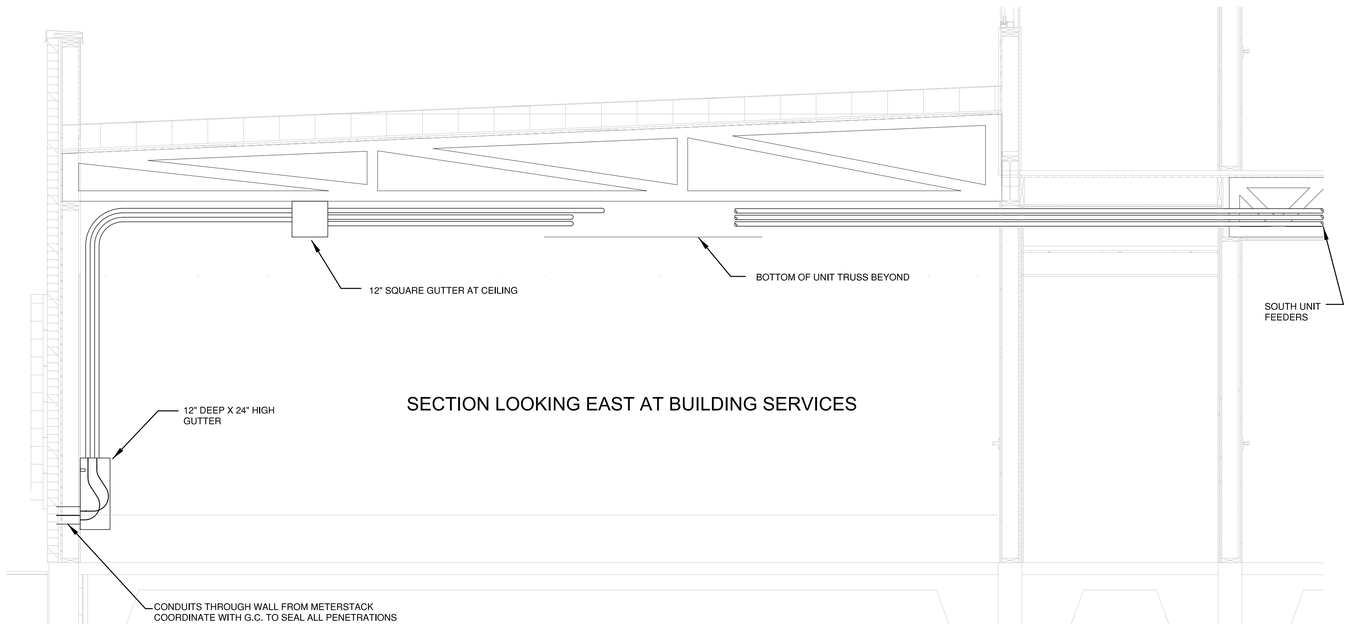

SECTION LOOKING EAST AT BUILDING SERVICES

HGF ARCHITECTS INC.

COLORADO REGISTERED PROFESSIONAL ENGINEER 33305

KOHNERT ELECTRICAL ENGINEER's, INC.
911 South 8th Steet
Colorado Springs Co 80905
Phone (719) 633-2637
Fax: (719) 633-3465
email@kohnertee.com

PROJECT NUMBER:	2019.042
PHASE:	Permit Set
PHASE ISSUE DATE:	
DESIGNED BY:	LMAK
SCALE:	1/4"=1'-0"

FEEDER INSTALLATION DETAILS
ELEVATIONS AND CEILING PLAN

SHEET ISSUE DATE: 04/27/20

E4.3

THE RIGHT PLACE
CARDINAL CAPITAL MGMT.
A SUPPORTIVE HOUSING FACILITY

Z:\2019\2019.042\ 2019.042 Service Plans E4.X 04-27-20 Stamped.dwg Apr 27, 2020 - 10:22am